tigerexped

EN

autoterm
air and liquid heaters

Operation manual

Control panel PU-5

for air heaters

AIR-2D 12V/24V AIR-4D 12V/24V
AIR-8D 12V/24V AIR-9D 12V/24V

v01.2018

Contents

Introduction 3
Warranty and liability 3
Safety 3
PU-5 control panel 4
Using the control panel 4
Installation of the control panel 5
Operating modes 5
Features of operating modes 6
Malfunctions 9

Manufacturer: AUTOTERM LLC
Paleju 72, Marupe, Latvia, LV-2167
Warranty Department warranty@autoterm.com
Technical Support service@autoterm.com
www.autoterm.com

Introduction

This Operating Manual is a part of the documentation for AIR air heaters. It contains an overview for the user on safe maintenance and operation of the product.

If you have any concerns, we strongly recommend that you contact the authorized service centers, the addresses and phone numbers of which you can obtain from the seller or on the website www.autoterm.com

Before operating the product, read this operating manual and the heater operating manual.

Warranty and liability

The manufacturer will not be liable for defects and damage caused by failure to follow the heater installation and maintenance instructions.

- The control panel is only allowed to be used for heater control.
- Do not connect and disconnect the control panel connector while the heater is operating.
- After the heater is switched off, it should not be switched on again after at least 5–10 seconds.
- For safe heater operation, after two consecutive failed starts, contact the service department for troubleshooting information.

  See the warranty certificate for product warranty period and warranty service terms.

Safety

Switching on and operation of the heater in locations where combustible vapors or gases or large amounts of dust can form and accumulate (for example, gas stations petroleum, fuel, coal, timber or grain storage facilities) is PROHIBITED. Explosion hazard.

Do not switch on and operate the heater in closed not ventilated rooms (boxes, garages, etc.). Hazard of poisoning and asphyxiation by exhaust gases.

Do not switch on and operate the heater if there are combustible particles or liquids in the exhaust gas. Fire hazard.

Do not use a faulty heater. Injury hazard due to use of faulty device.

PU-5 control panel

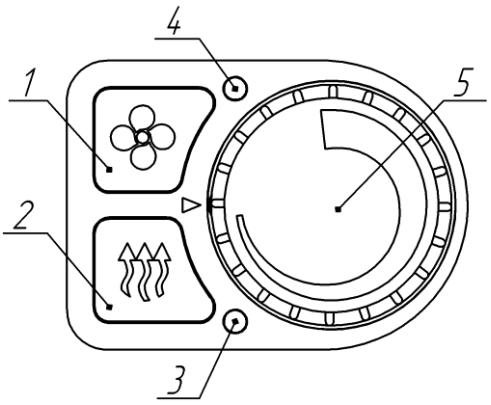

The following are located on the front of the panel:
1 – Ventilation mode on/off button;
2 – Heater on/off button;
3 – Operation LED display;
4 – Ventilation mode LED display;
5 – Potentiometer knob.

The LED in Pos. 3 indicates the heater status:
- yellow light - heating mode;
- fast blinking yellow – during purging;
- slowly blinking red - in case of malfunction;
- off - heater is not operational.

The LED in Pos. 4 indicates the ventilation mode status:
- green light - interior sensor is not connected and heater operates in ventilation mode;
- green blink - ventilation mode off;
- yellow light - the interior sensor is connected and the heater operates in heating mode with ventilation function;
- off - heater is not operational, with ventilation mode off.

Using the control panel

- When the heater is connected to the vehicle electrical circuit, the display pos. 4 fast blinks green to display the connection process.
- The button pos. 1 is designed to:
  - switch the ventilation mode on and off;
  - switch the ventilation function on and off in heating mode (if the interior sensor is connected).
- The button pos. 2 is designed to switch on the heater in heating mode (for an unlimited time) and switch the heater off.
- The regulator pos.5 is intended for:
  - regulations of speed of rotation of the fan on the ventilation mode;
  - regulations of heating capacity of a heater from "min" to "max" of kW on the heating mode;
  - regulations of desirable air temperature from 1 °C (or 15 °C *) to 30 °C on the heating mode.

* - Depending on the heater model and production year.

Installation of the control panel

- Apply a marking (see. Fig.1) on a surface for installation of the control panel (a hole for a harness and a hole for the self-tapping screw).
- Pull and dismantle the potentiometer knob. Before dismantling the potentiometer's knob remember orientation of the knob relative to the mark on the control panel.
- Install the control panel on a surface and secure it with a self-tapping screw.
- To install the potentiometer handle in former situation (which you remembered before), insert an edge of a plastic detail in the knob with a cuts into a potentiometer's shaft.

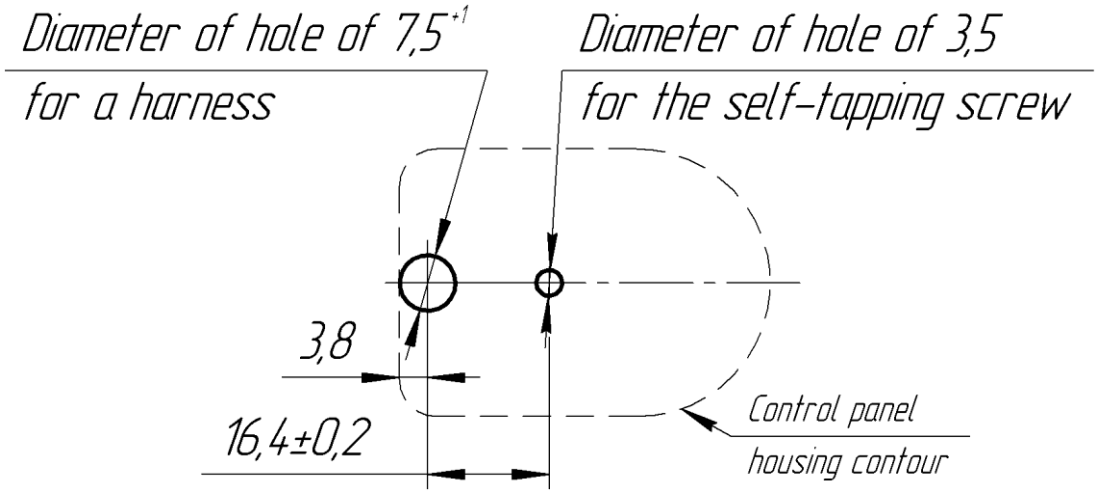

Fig.1

Operating modes

"power" *(if the interior sensor is not connected)*	• designed for quickest possible heating of the space; • the heater operates continuously at a set power.
"temperature" *(if the interior sensor is connected)*	• designed to heat the space to the required temperature; • heat output decreases as the difference between the desired temperature and the temperature in the space decreases.
"ventilation"*	• designed for air circulation in the space
"Ventilation during heating" function (if the interior sensor is connected)	• designed to maintain the required temperature in the space; • after the required temperature is reached, the space heating is stopped and space air circulation is performed; • controls the space temperature; if the temperature drops below the set point, the heater will start in heating mode.

Features of operating modes

- In case of “power” control mode is selected, the heater operates continuously with selected heat output. When a comfortable temperature is reached, we recommend to reduce power, ventilate the space or to switch off the heater.
- If the interior sensor is connected, the heater operates automatically in “temperature” mode. The heater will operate to maintain the desired temperature from 1ºC (or 15ºC *) to 30ºC; here, the heater heat output will vary from max to min depending on the air temperature. The higher the air temperature, the less heat produced by the heater.

*- Depending on the version and year of production of a heater. The version of the program with adjustment of temperature from 1ºC to 30ºC. C introduced since March, 2014.

Position (approximate) potentiometer knob with cabin sensor connected.

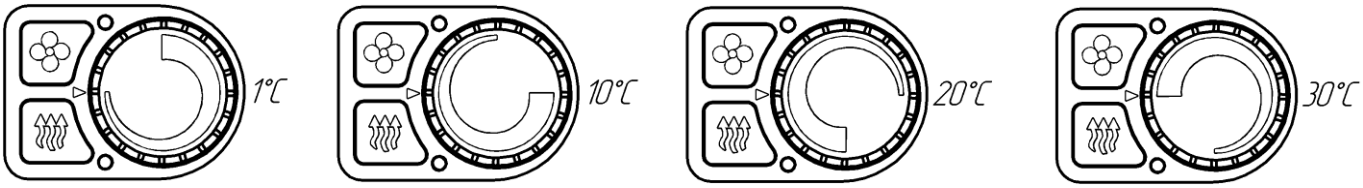

If the interior sensor is connected, after set temperature achieved:

- **without** the “ventilation” function activated, the heater will switch to “minimum” mode. The further operation of the heater depends on the temperature of the space:

a) if the temperature keeps increasing, the heater will continue to operate with “minimum” output. The heater can be switched off manually.
b) if the temperature begins to decrease, the heater will gradually increase the heat produced to maintain the required temperature in the space. The heater can be switched off manually.

- **with** the “ventilation” function activated, when the required temperature is reached the combustion will stop and air circulation in the space will start. When the temperature in the space drops 5 ºC below set point, the heater will fire up again. The heater can be switched off manually.

Do not switch off the heater electric power before the purging cycle is completed.

If the interior temperature sensor circuit breaks (during operation), the heater will switch to medium-power mode.

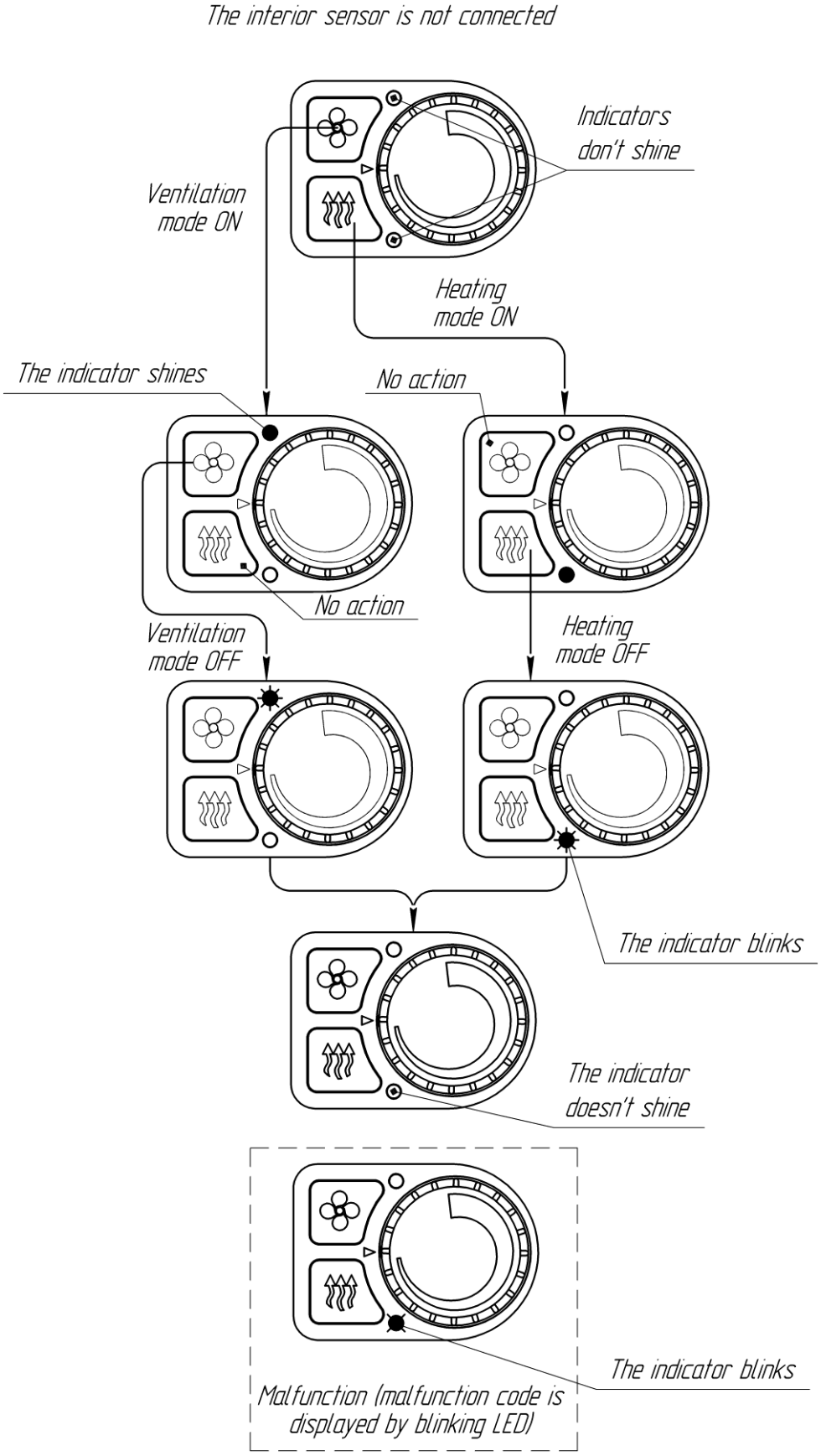

Control operation diagram

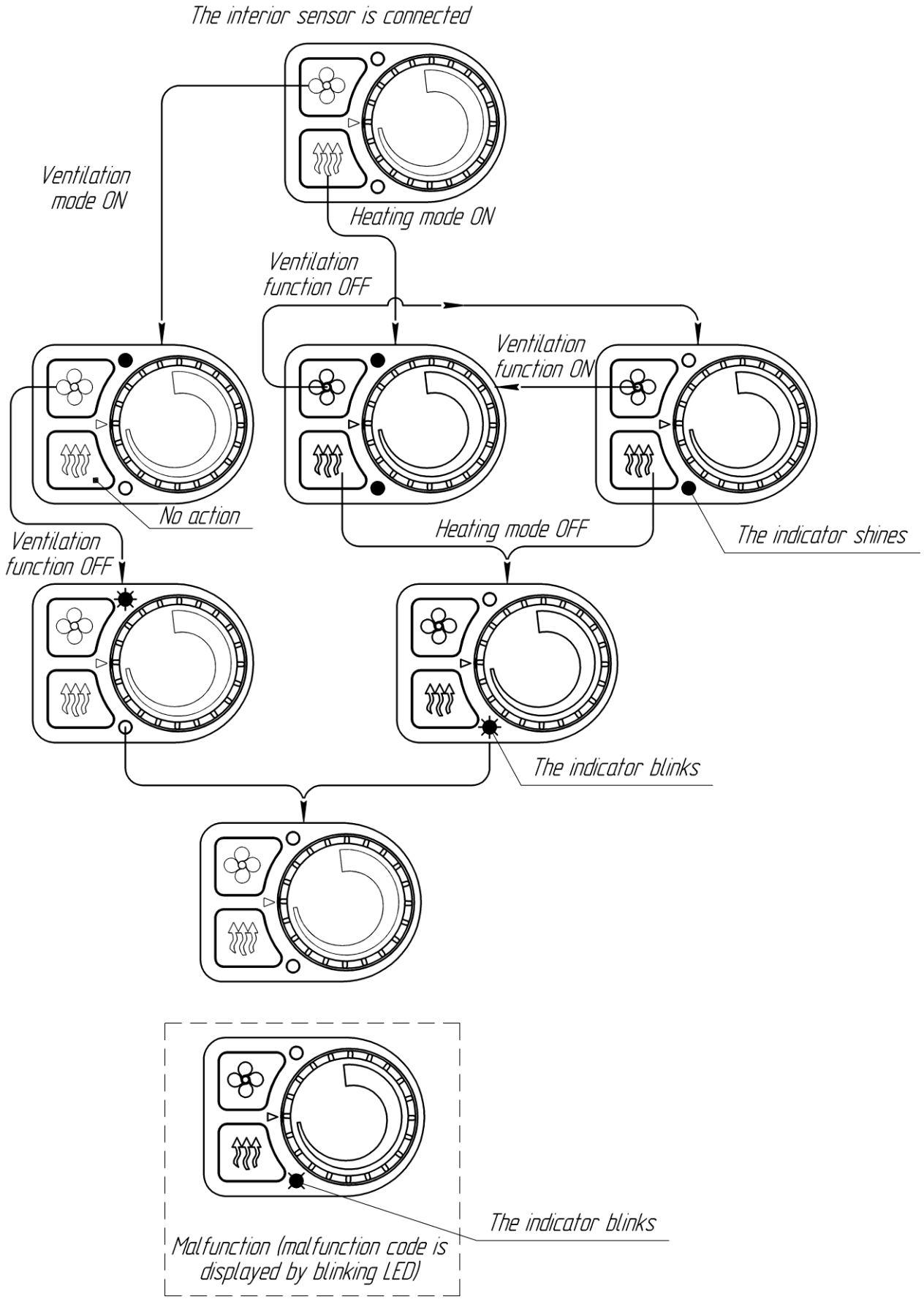

Control operation diagram

Malfunctions

Malfunctions occurring during heater operation are coded and automatically displayed on the control panel by blinking of the red LED in pos. 4 (with pause). For malfunction reset, press any key.

ATTENTION!
Maintenance and repair should only be performed by trained, qualified personnel!

The user can correct the following malfunctions (Table 1).
For all other malfunctions (Table 2) or if the user cannot correct the malfunction, contact a service center.

Table 1

Number of blinks	Malfunction description	Comments Troubleshooting
1	Heat exchanger overheating	Check the heater inlet and outlet pipes for free inflow and outflow of heated air.
2	All attempts to start failed	Check the fuel supply (check the fuel line). Check the combustion air supply system and the gas exhaust pipe.
3	Too many flameouts during operation	Check the fuel supply (check the fuel line). Check the combustion air supply system and the gas exhaust pipe.
8	No communication between control panel and control unit	Check connecting wires and connectors. Control panel doesn’t receive data from the control unit.
		Check connecting wires and connectors. Control unit doesn’t receive data from the control panel.

Number of blinks	Malfunction description	Comments Troubleshooting
9	Shutdown due to overvoltage	Check the battery, the voltage regulator and power supply wiring. Voltage between contacts 1 and 2 of power connector should not be higher than 30 V (not higher than 16 V for 12 V product).
	Shutdown due to undervoltage	Check the battery, the voltage regulator and power supply wiring. Voltage between contacts 1 and 2 of power connector should not be lower than 20 V (not lower than 10 V for 12 V product).
10	Ventilation time exceeded	Check the air intake and the exhaust pipe. If clogged, remove foreign particles.
12	Overheating in the control unit area. Overheating via flame detector	Check the heater inlet and outlet pipes for free inflow and outflow of air. Check the combustion air supply system and the gas exhaust pipe. Repeat the starting procedure for heater cooling.
13	Flameout in combustion chamber due to voltage drop	Check the battery and wiring. (Voltage drop can be caused by long operation of the electric starter). *Only for AIR-8D, AIR-9D type air heaters*
14	Overheating inside the heater in the area of the heated air outlet temperature sensor	Check the heater inlet and outlet pipes for free inflow and outflow of air. *Only for AIR-8D, AIR-9D type air heaters*
16	Heater is locked*	To unlock the heater contact a service center. *Only for AIR-8D type air heaters*

*** Attention!** *If the “Overheating” error appears three consecutive times during heater startup or operation, it will be locked. The locking is activated due to overheating, regardless of which sensor that detected the errors. In case of lock, the control panel LED will blink 16 times. To unlock the heater, contact a service center.

Table 2

Number of blinks	**Malfunction description**
4	Glow plug fault
5	Flame detector fault
5	Open circuit of the heat-exchanger shell temperature sensor *Only for AIR-2D type air heaters*
6	Malfunction of control unit integrated temperature sensor
7	Fuel pump fault
11	Air blower fault. Speed of fan is lower than rated.
	The motor does not rotate.
	The motor rotates uncontrollably.
	Electric motor overload *Only for AIR-9D type air heaters*
15	Faulty outlet air sensor *Only for AIR-8D, AIR-9D type air heaters*
17	Body temperature sensor circuit break of heat-exchanger *Only for AIR-4D, AIR-8D type air heaters*
18	Open circuit of the outlet air temperature sensor *Only for AIR-8D, AIR-9D type air heaters*
19	Incorrect installation of the sensor *Only for AIR-8D, AIR-9D type air heaters*
20	Flame detector temperature exceeds the normal value *Only for AIR-8D, AIR-9D type air heaters*
37	Flame detector and outlet sensors are connected incorrectly *Only for AIR-9D type air heaters*

autoterm