RENOGY

Find Your Energy Freedom™

REGO

DC-DC Battery Charger

12V | 60A

VERSION A0

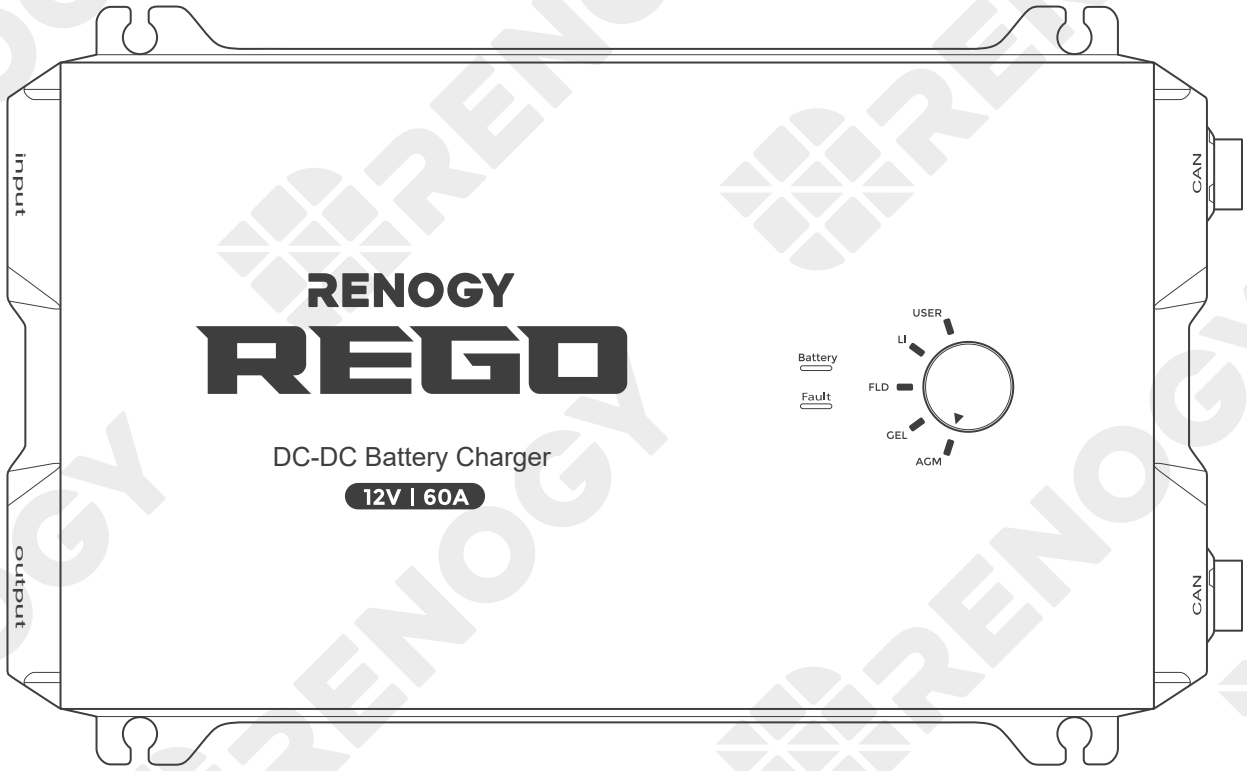

USER MANUAL

Applicability

The user manual applies to the following product:

- REGO 12V 60A DC-DC Battery Charger (RBC1260DO-12B)

Disclaimer

- Renogy makes no warranty as to the accuracy, sufficiency, or suitability of information in the user manual because continuous product improvements are going to be made.
- Renogy assumes no responsibility or liability for losses or damages, whether direct, indirect, consequential, or incidental, which might arise out of the use of information in the user manual.
- Renogy is not responsible or liable for the failures, damages, or injuries resulting from repair attempted by unqualified personnel or improper installation and operation.
- The illustrations in the user manual are for demonstration purposes only. Details may appear slightly different depending on product revision and market region.
- Renogy reserves the right to change the information in the user manual without notice.

Copyright

REGO 12V 60A DC-DC Battery Charger User Manual © 2022 Renogy. All rights reserved. All information in the user manual is subject to copyright and other intellectual property rights of Renogy and its licensors. The user manual may not be modified, reproduced, or copied, in whole or in part, without the prior written permissions of Renogy and its licensors.

Trademarks

The following are trademarks or registered trademarks of Renogy in the United States and other countries and regions:

RENOGY	RENOGY

All other trademarks in the user manual are the property of their respective owners and their use herein does not imply sponsorship or endorsement of their products or services. The unauthorized use of any trademark displayed in the user manual or on the product is strictly prohibited.

Date and Revision

March 2022, Revision A0

Table of Contents

Important Safety Information 05
- Symbols Used 05
- General Safety Information 05

Introduction 07
- General Information 07
- Key Features 07

Charging and Activation Logics 08
- Four Charging Stages 08
- Lithium Battery Activation 09

Package Contents 10

Optional Accessories 11

Product Overview 12

Wiring Diagram 13

Recommended Cable Sizing 14

Preparation 15
- Components & Tools 15
- Checking the Battery Charger 17
- Checking Auxiliary Battery 18
- Automobile Alternator Check 19

System Diagram 23
- Battery Scenario A: REGO Battery Kit 23
- Battery Scenario B: Normal Battery Kit 25

Battery Charger Wiring 26

Auxiliary Battery Wiring 28
- Battery Scenario A: REGO Battery Kit 28
- Battery Scenario B: Normal Battery Kit 32
- Battery Indicator 33

Input Wiring 34

Mounting 36

Temperature Sensor 37

Voltage Sensor (Optional) 38

Communication....39
Inter-Device Communication....39
Monitoring Device Communication....42
Operation....47
Selecting the Battery Type....47
Battery Charging Parameters....49
User Mode....50
Charging Logic....53
LED Indicators....55
Battery status....55
Fault status....55
Troubleshooting....56
Technical Specifications....57
Dimensions....58
Maintenance....59
Inspection....59
Cleaning....59
Storage....59
Emergency Responses....60
Fire....60
Flooding....60
Smell....60
Noise....60
Technical Support....61

Important Safety Information

The user manual provides important installation, operation, and maintenance instructions for REGO 12V 60A DC-DC Battery Charger (hereinafter referred to as battery charger). Read the user manual carefully before installation and operation and save it for future reference. Failure to observe the instructions or precautions in the user manual can result in electrical shock, serious injury, or death, or can damage the battery charger, potentially rendering it inoperable. The installation and service of the battery charger might require knowledge of electricity and is recommended to be carried out by qualified personnel.

Symbols Used

The following symbols are used throughout the user manual to highlight important information:

WARNING	Indicates a potentially dangerous condition which could result in injury or death.
CAUTION	Indicates a critical procedure for safe and proper installation and operation.
NOTE	Indicates an important step or tip for optimal performance.
INFO	Indicates that more information is available in other documents relating to the subject.

General Safety Information

WARNING

- Do not puncture, drop, crush, penetrate, shake, strike, or step on the battery charger.
- Do not open, dismantle, repair, tamper with, or modify the components of the battery charger.
- Install the battery charger on a vertical surface indoors protected from direct sunlight, high temperature, and water. Make sure there is good ventilation.
- Keep the battery charger away from heating equipment.
- Do not insert foreign objects into the battery charger.
- Risk of explosion! Never install the battery charger in a sealed enclosure with flooded batteries! Do not install in a confined area where battery gases can accumulate.
- Confirm the polarities of the devices before connection. A reverse polarity contact will damage the battery charger and void the warranty.
- Refer to the Recommended Cable Sizing in this manual, and select the appropriate cables according to the actual use.
- Keep the battery charger out of the reach of children.
- Wear proper protective equipment and use insulated tools during installation and operation.

- Do not touch the connector contacts while the battery charger is in operation.
- Disconnect all connectors from the battery charger before maintenance or cleaning.
- Do not dispose of battery charger as household waste. Comply with local, state, and federal laws and regulations and use recycling channels as required.
- In the event of fire, use fire extinguishers suitable for electrical equipment.
- If the battery charger is installed improperly on a boat, it may cause damage to the corrosive agents of the boat. Have the battery charger installed by a qualified electrician.

CAUTION

- Do not expose the battery charger to flammable or harsh chemicals or vapors.
- Ensure that there is no water source including downspouts, sprinklers, or faucets above or near the battery charger.

Introduction

General Information | Key Features

General Information

REGO 12V 60A DC-DC Battery Charger saves on installation time than the traditional battery charger. The pioneering bidirectional charging technology not only provides the most effective way to charge your auxiliary batteries from the starter battery on the go but also recharges and maintains your starter battery when the auxiliary batteries are full. The battery charger is compatible with a multitude of types of 12V batteries. In addition, the four-stage charging provides various protections to ensure ultra safety. Easily add this battery charger to your RVs, commercial vehicles, boats, yachts, and many more applications, to get stable energy on the go!

Key Features

- **Pioneering Bidirectional Charging**

This battery charger can charge your auxiliary batteries from the starter battery when driving and recharge your starter battery when the auxiliary batteries are full. Keep both your auxiliary batteries and starter battery always have adequate power on the go.

- **Extremely Simplified Installation and Easy to Select the Battery Type**

This battery charger uses Anderson connectors instead of traditional ring terminals. This significantly simplifies device connection, saving over 60% installation time. The unique mechanical design requires no more complicated data setting steps. You can select the battery type with a simple turn on the knob.

- **High-Efficiency Charging**

The battery charger adopts the four-stage charging technology (Bulk / Boost / Float / Equalization) to prolong the battery lifespan, realizing an optimal charging efficiency.

- **Compatible with Multiple Battery Types, Suitable for Wide Application**

The battery charger is compatible with multiple types of batteries: AGM, Sealed Lead Acid (SLD), Flooded, Gel, and Lithium, providing a powerful charging solution for different occasions. Moreover, it can interoperate with with both traditional and smart alternators.

- **Various Protections for Ultra Safety**

The battery charger provides overvoltage protection, overheat protection, and reverse polarity protection at the input and output to ensure safe operation. With a guaranteed quality, the battery charger has obtained many certifications, including CB, FCC, CE, UKCA, and MIC.

Four Charging Stages

REGO 12V 60A DC-DC Battery Charger has a four-stage battery charging algorithm for a rapid, efficient, and safe battery charging. The stages include: Bulk Charge, Boost Charge, Float Charge, and Equalization.

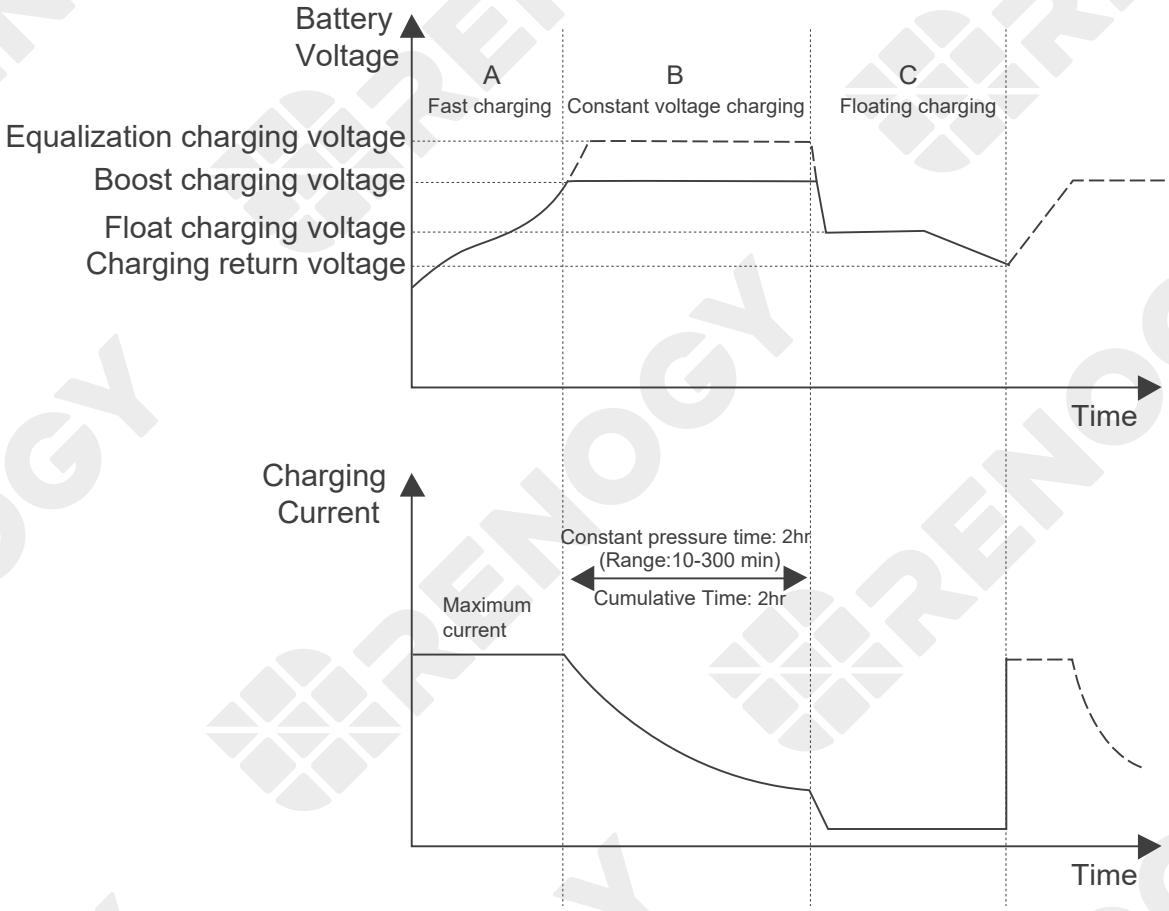

Bulk Charge:

During the high current fast charging phase, if the battery voltage has not yet reached the preset value (Equalization or Boost), the battery charger will perform Bulk charging and output a constant maximum current value continuously and steadily. When the battery voltage reaches the preset value, it will move to the next stage of constant voltage.

Constant Charging:

When the battery voltage reaches the preset value, the battery charger enters the constant voltage charging stage, and constant high current charge is no longer used in this process. At the same time, the charge current will gradually drop. Two states exist in the constant voltage charging phase-Equalizing and Boosting, which are not repeated.

Boost Charge: Boost stage maintains a charge for 2 hours by default. The user can adjust the constant time and preset value of Boost according to their demand.

Float Charge:

After the constant voltage stage, the controller will reduce the battery voltage to a Float voltage set point. Once the battery is fully charged, there will be no more chemical reactions

and all the charge current would turn into heat or gas. In this case, the battery charger will reduce the voltage charge to smaller quantity, while lightly charging the battery. The purpose for this is to offset the power consumption while maintaining a full battery storage capacity. In the event that a load drawn from the battery exceeds the charge current, the battery charger will no longer be able to maintain the battery to a Float set point and the battery charger will end the Float charge stage and refer back to Bulk charging.

Equalization:

Equalization is carried out every 30 days of the month. It is intentional overcharging of the battery for a controlled period of time. Certain types of batteries benefit from periodic equalizing charge, which can stir the electrolyte, balance battery voltage and complete chemical reaction. Equalizing charge increases the battery voltage, higher than the standard complement voltage, which gasifies the battery electrolyte.

CAUTION

- It is recommended to only use no-sealed / vented / flooded / wet cell lead acid batteries in the Equalization stage, and the battery charger provides Equalization charging for flooded type batteries by default.
- Do not equalize VRLA type AGM / Gel / Lithium cell batteries unless permitted by battery manufacturer.

WARNING

- Once Equalization is active in the battery charging, the battery charger will not exit this stage unless there is a sufficient source of charging current from the starter battery. There should be NO load on the batteries when in Equalization charging.
- Overcharging and excessive gas precipitation may damage the battery plates and activate material shedding on them. Too high of an Equalization charge or too long of one may cause damage. Carefully review the specific requirements of the battery used in the system.
- Equalization may increase battery voltage to a level damaging to sensitive DC loads. Ensure that allowable input voltages of all loads are greater than the set voltage during Equalization charging.

Lithium Battery Activation

For the lithium battery with BMS protection, there is a possibility of an open circuit when the BMS protection function is enabled. Therefore, the battery charger will output a stable voltage in time in the lithium battery mode. In this way, the lithium battery will be activated to exit BMS protection function.

Package Contents

REGO 12V 60A DC-DC Battery Charger x 1	Quick Guide x 1
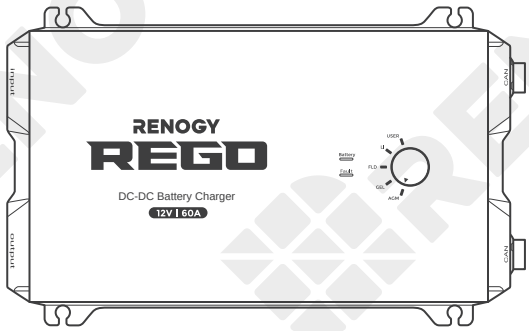	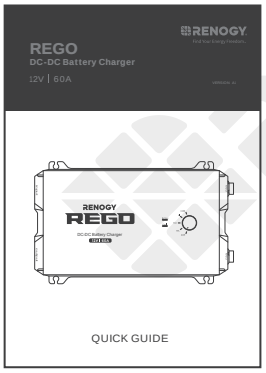

Renogy Temperature Sensor x 1 (Model: RTSCC)	IGN Signal Wire x 1
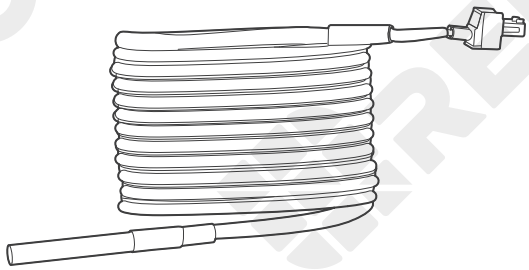	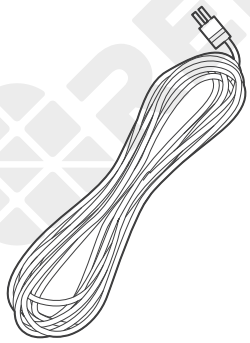

Screws x 4
ST 6.3 x 1.8 x 13 mm 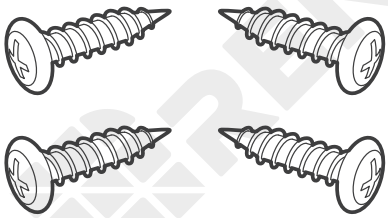

Optional Accessories

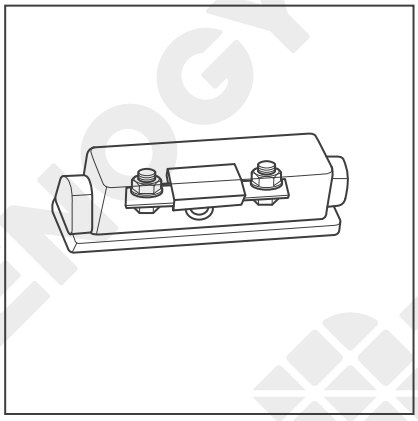

Starter Battery Fuse (90A) as input

Auxiliary Battery Fuse (80A) as output

The battery fuses protect battery charger, wires and batteries from overcurrent.

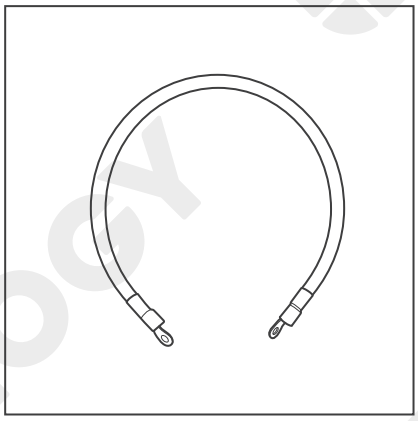

Fuse Cable

The cable is integrated with copper rings at both ends, enabling the battery charger to be connected with an external fuse.

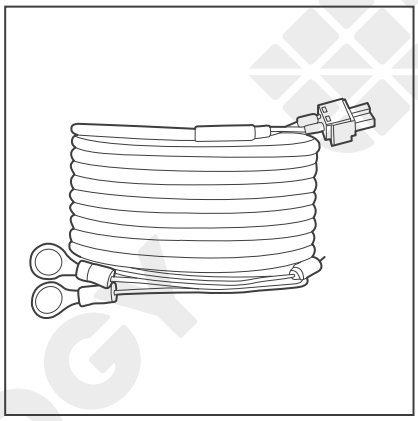

Battery Voltage Sensor (Model: RVSCC)

The charging voltage of the battery charger is affected by the length and size of the wire. The voltage sensor can calibrate the charging voltage error caused by the wire to ensure that the battery charger works properly.

Product Overview

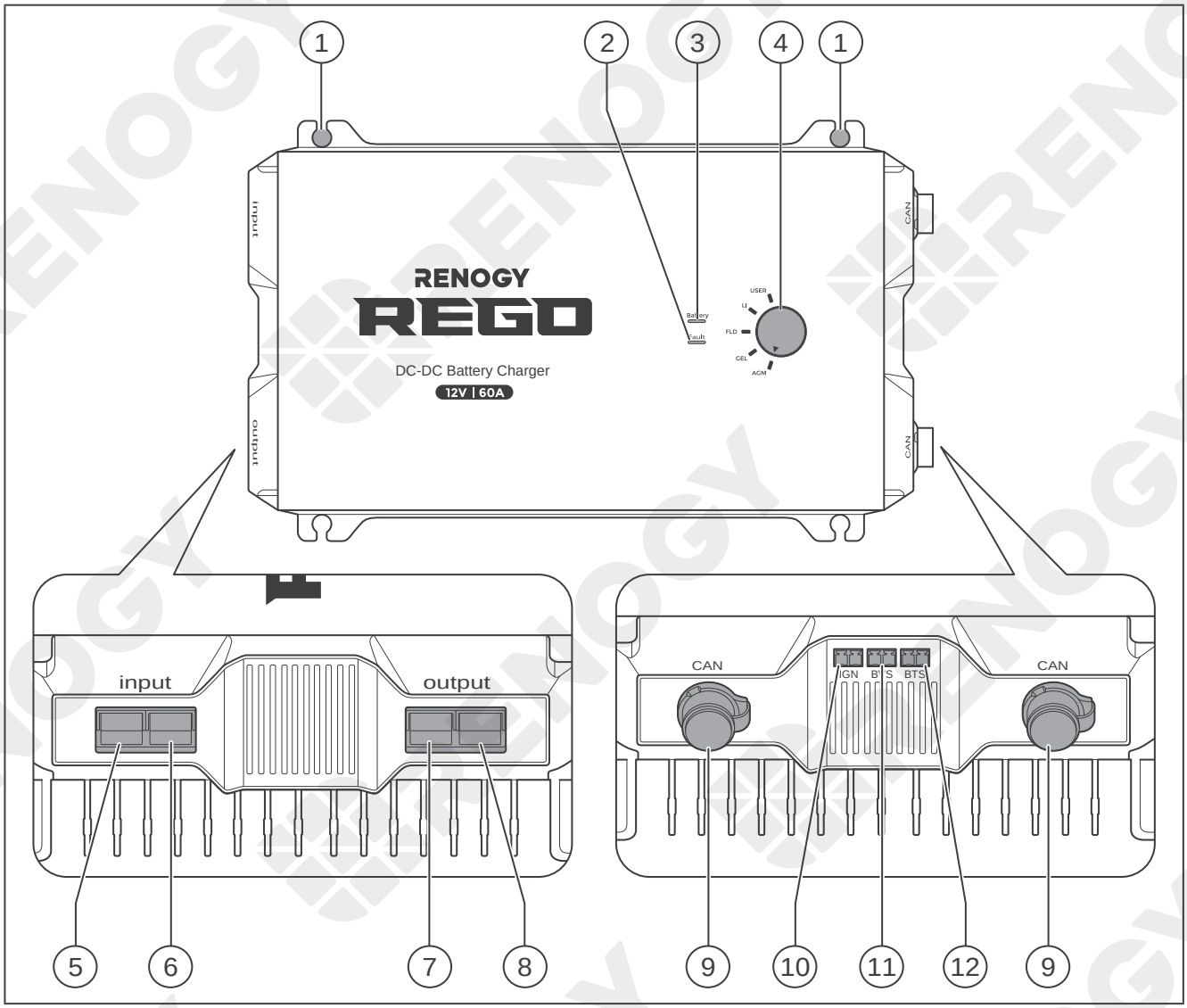

No.	Part	No.	Part
1	Mounting Holes	7	Negative Output
2	Fault Status Indicator	8	Positive Output
3	Battery Status Indicator	9	CAN Communication Ports
4	Battery Type Setting Knob	10	IGN Signal Wire Port
5	Positive Input	11	Battery Voltage Sensor (BVS) Port
6	Negative Input	12	Battery Temperature Sensor (BTS) Port

Wiring Diagram

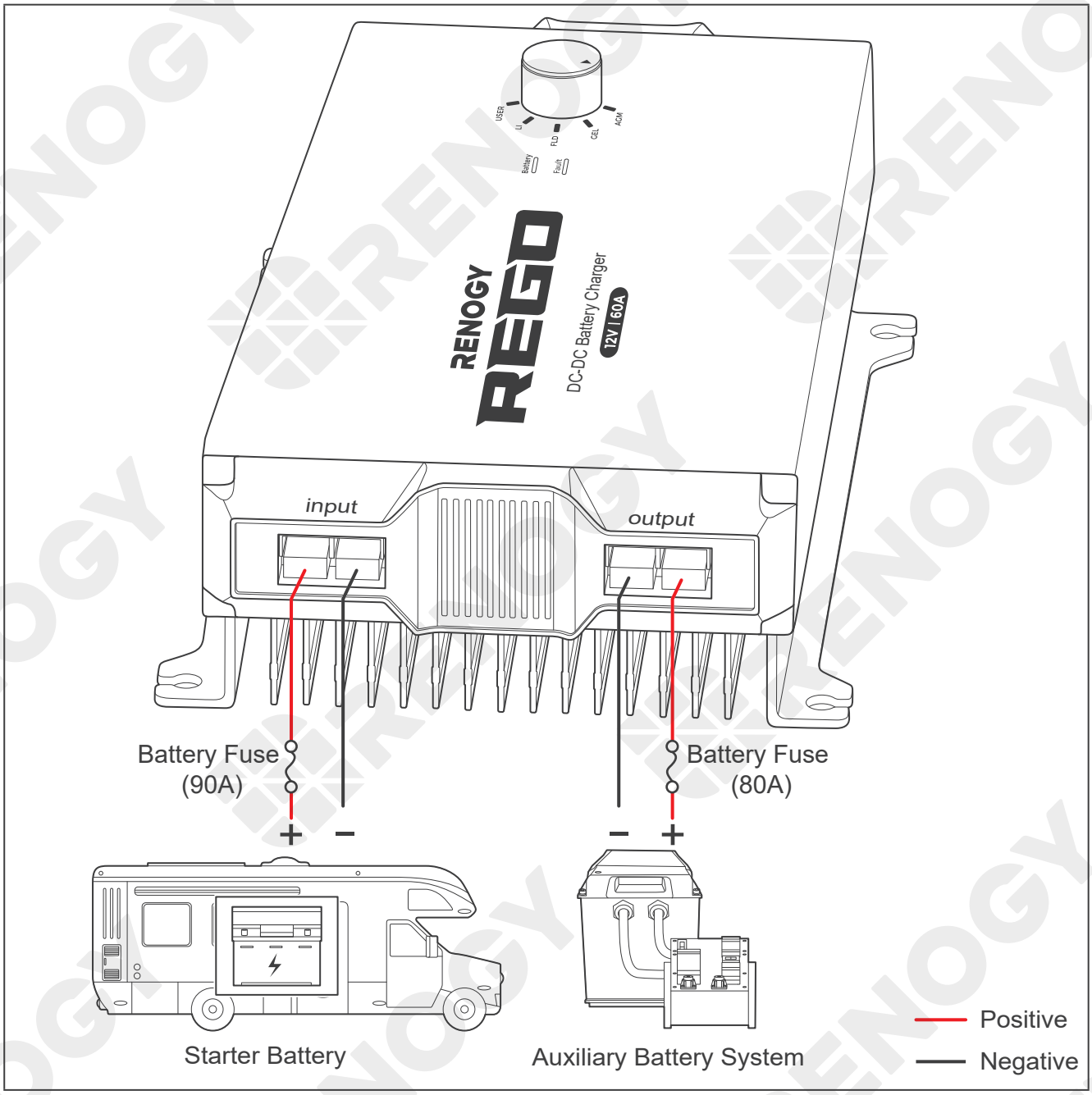

Recommended Cable Sizing

Model	Cable	Cable Length (ft) / (m)	Recommended Cable Size
REGO 12V 60A DC-DC Battery Charger (RBC1260DO-12B)	Input	0 ft to 10 ft (0 m to 3 m)	6 AWG
		11 ft to 20 ft (3 m to 6 m)	6 AWG
		21 ft to 30 ft (6 m to 9 m)	4 AWG
	Output	0 ft to 10 ft (0 m to 3 m)	8 AWG
		11 ft to 20 ft (3 m to 6 m)	6 AWG to 8 AWG
		21 ft to 30 ft (6 m to 9 m)	6 AWG

NOTE

- The cable specifications listed above account for critical, less than 3% voltage drop and may not account for all configurations.
- The specification of fuse cable is consistent with that of the input/output terminal of battery charger.

Components & Tools

NOTE

- The adapter cable used in this manual can be made by yourself or purchased from renogy.com according to the names in Recommended Components.

Recommended Components

Battery Scenario A: REGO Battery Kit

REGO 12V 400Ah Lithium Iron Phosphate Battery	Battery Adapter Cables (input) (Anderson PP75 to Ring Terminal Adapter Cable)
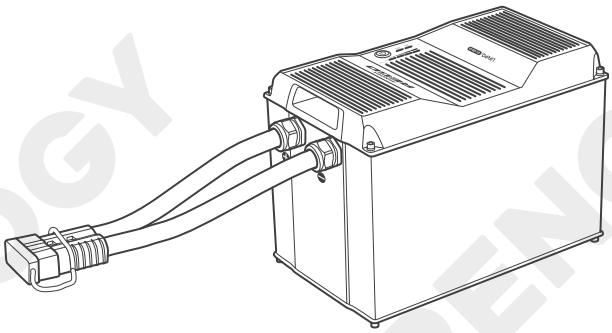	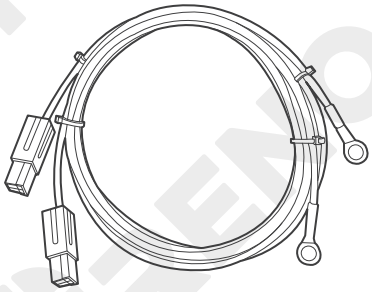
System Combiner Box Accessory Set	Positive/Negative Busbars Accessory Set
REGO 4 Ports 400A System Combiner Box	Positive/Negative Busbars
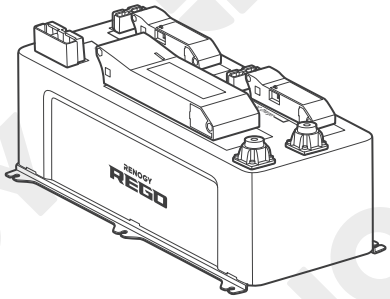	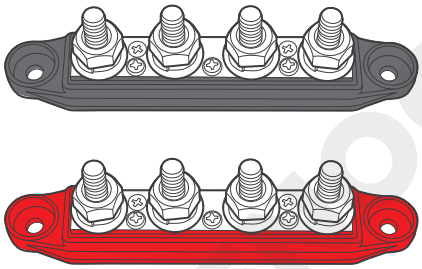
Battery Adapter Cable (output) (Anderson PP75 to Anderson 120 Adapter Cable or Anderson PP75 to Ring Terminal Adapter Cable)	Battery Adapter Cable (output) (Anderson PP75 to Ring Terminal Adapter Cable)
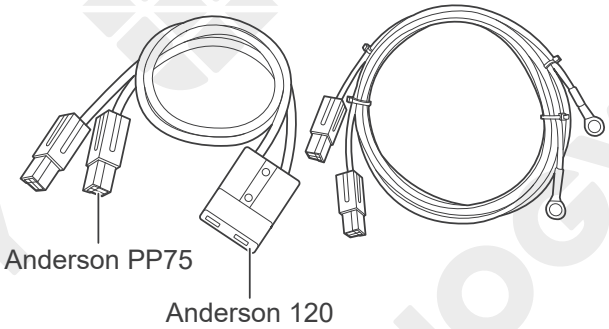	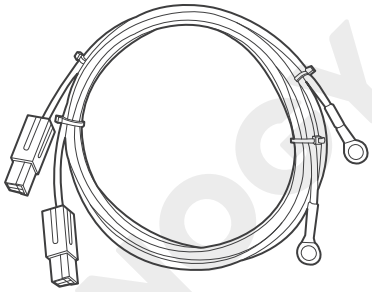

Battery Scenario B: Normal Battery Kit

Normal Battery with +/- Bolts	Battery Adapter Cables (input / output) (Anderson PP75 to Ring Terminal Adapter Cable)
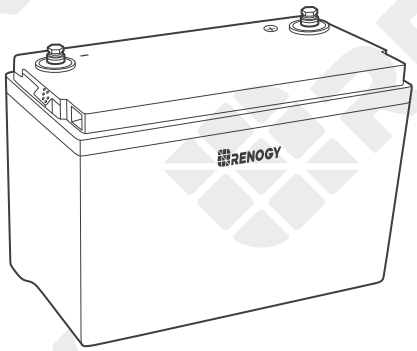	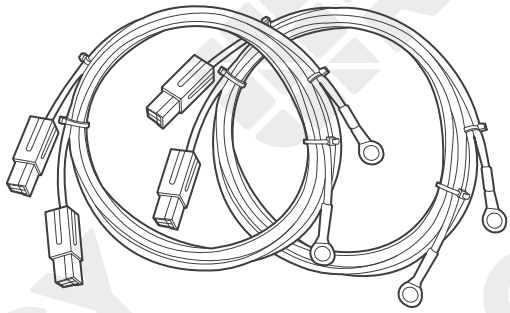

Required Tools

Wrench (10mm)	Wrench (14mm)	Measuring Tape	Insulation Tape
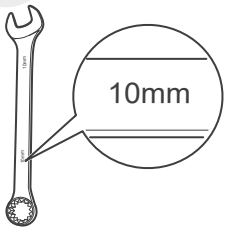	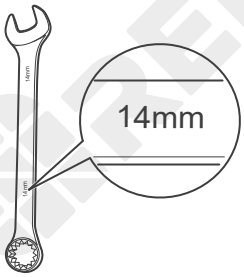	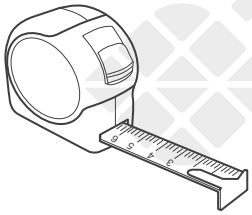	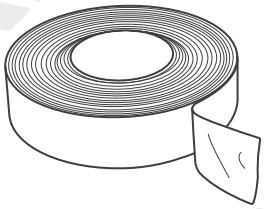

Checking the Battery Charger

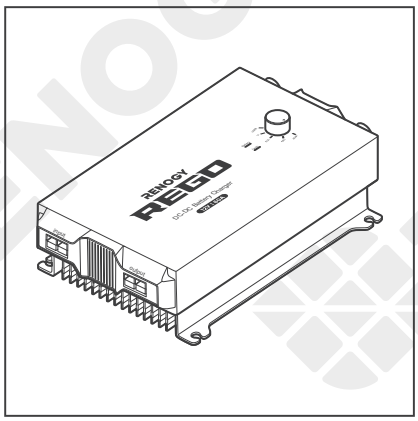

1. Inspect the battery charger for any visible damage including cracks, dents, deformation, and other visible abnormalities. All connector contacts shall be clean, dry, and free of dirt and corrosion.

WARNING

- Do not use the battery charger if it has any visible damage.

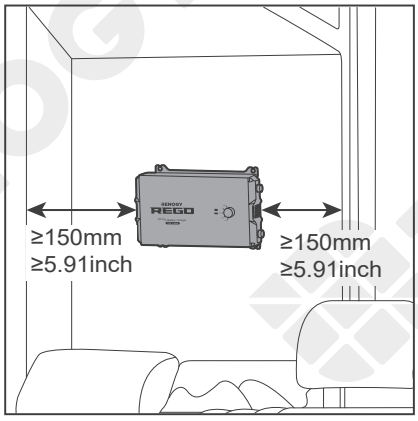

2. Confirm the installation location.

WARNING

- Install the battery charger indoors and prevent its components from being exposed to direct sunlight. Prevent water from entering the battery charger.
- Risk of explosion! Never install the battery charger in a sealed enclosure with flooded batteries! Do not install it in a confined area where battery gases can accumulate.
- The battery charger requires at least 6 inches (150mm) of clearance above and below for proper air flow.
- Make sure that the battery charger is installed in an environment with relative humidity between 0% and 95% and no condensation.

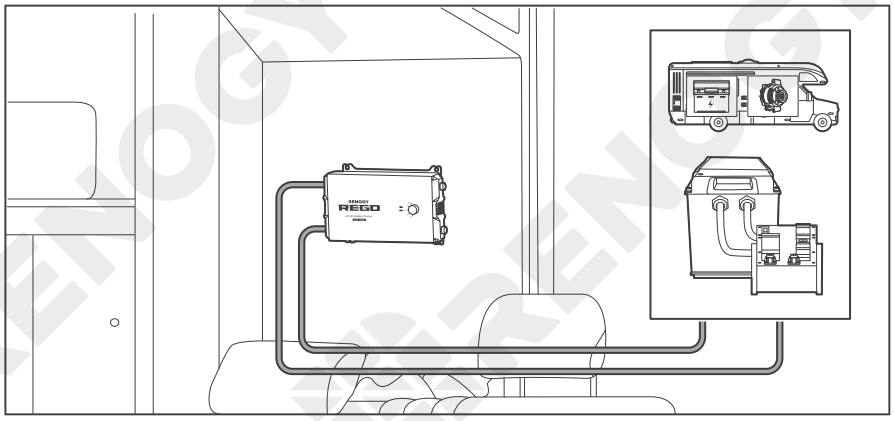

3. Measure the length of the Battery Adapter Cable to make sure it can be connected to the battery charger.

NOTE

- If the Battery Adapter Cable is not long enough, you can use more extension cables or reselect the installation site.

WARNING

- Refer to the Recommended Cable Sizing in this manual, and select the appropriate cables according to the usage.

Checking Auxiliary Battery

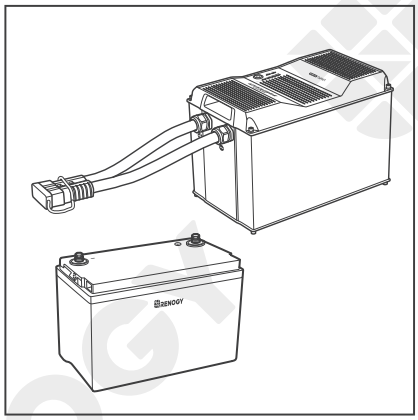

1. Inspect the auxiliary battery for any visible damage including cracks, dents, deformation, and other visible abnormalities. All connector contacts shall be clean, dry, and free of dirt and corrosion.

INFO

- Read the user manual of the auxiliary battery carefully before installation.

NOTE

- Make sure the battery is working normally.
- The battery charger can only be applied to a deep-cycle sealed lead-acid battery, a flooded battery, a gel battery, or a lithium iron phosphate battery.
- Take care to use a high-capacity lead-acid battery. Be sure to wear protective goggles. If carelessly getting electrolyte in your eyes, flush the eyes with clean water immediately.

CAUTION

- Comply with local, state, and federal laws and regulations and use recycling channels as required when disposing of unwanted batteries.

WARNING

- Do not use the battery charger if it has any visible damage.
- Do not touch the exposed electrolyte or powder if the battery housing is damaged.
- When being charged, the battery may give off explosive gas. Make sure there is good ventilation.

Battery or Battery Pack System Voltage	
Battery or Battery Pack System Voltage = System Voltage U	
Batteries in Series	**Batteries in Parallel**
System Voltage U: $U_1+U_2+U_3$	System Voltage U: $U_1=U_2=U_3$

2. Combine batteries in parallel or in series as needed. This battery charger supports a maximum system voltage of 16V. Refer to the user manual for battery voltage parameters, and calculate the battery or battery pack system voltage according to the formula to ensure that it does not exceed 16V.

NOTE

- In the formula, U represents the battery voltage, and 1, 2 or 3 represents the battery number, respectively.

WARNING

- Do not use the battery charger if the battery/battery pack system voltage exceeds 16V. Doing so will cause damage to the battery charger.

Automobile Alternator Check

The automobile alternator may be a smart alternator or a traditional alternator. The connection method of a smart alternator or a traditional alternator depends on its parameters. Before installing the battery charger, refer to the user manual of the vehicle or consult the vehicle supplier to determine the type of alternator. In addition, you can use a multimeter by yourself to measure the alternator to determine the type of alternator.

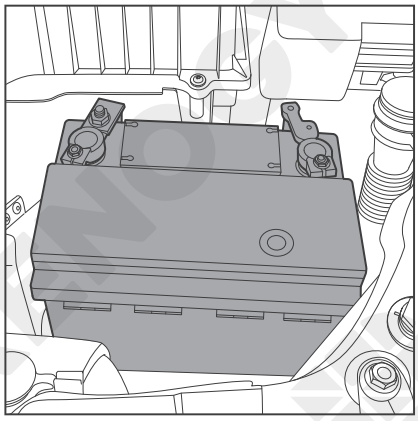

1. Locate your main vehicle battery/starter battery.

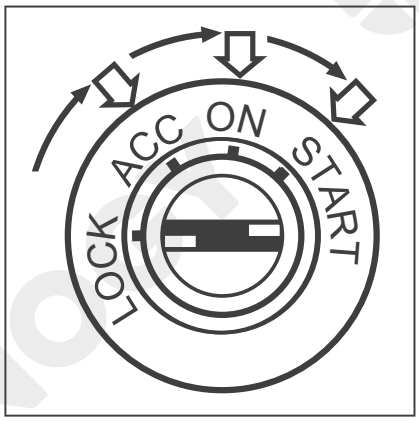

2. Start the engine, ensuring any fans, radio, and lights are turned off. Leave the engine running for around 5 to 10 minutes.

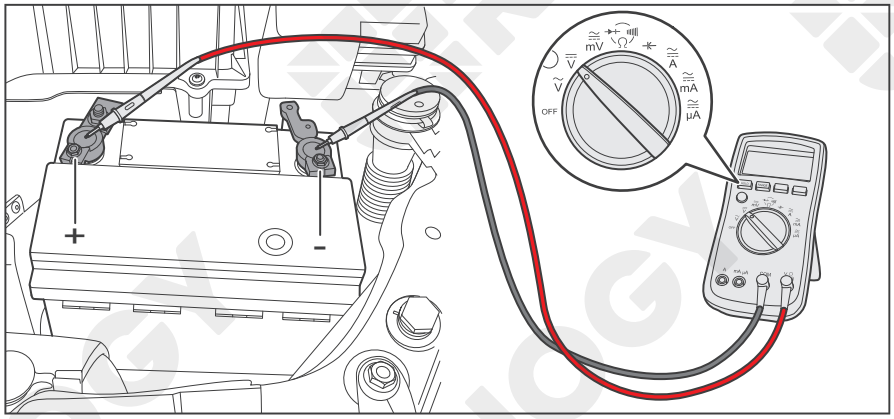

3. Read the voltage of the main vehicle battery.

   For traditional alternators, the DC voltage is around 14.4V. For smart alternators, the DC voltage is around 12.5V to 13.5V.

NOTE

- In general, the working voltage of a traditional alternator ranges from 13.5V to 16V, and that of a smart alternator ranges from 12.5V to 16V.
- Make sure the alternators output a minimum current of 90A to 120A, at least 1.5 to 2 times that of the battery charger.
- Due to the current limit protection mechanism, the battery charger takes a maximum of 70A current generated from the alternator.

WARNING

- Identify the polarities (positive and negative) on the cables used for the batteries. A reverse polarity contact may damage the battery charger.

Alternator Recommendation

Check your alternator and identify the number of terminals. Most alternator will have 3 wires connected (BAT+, BAT-, and IGN). The table below shows an example alternator terminal, and may not match your application. Refer to your vehicle's documentation and part for actual wiring.

① BATT+	Could be labeled as "B", "Bat", or "Pos". This will connect directly to the battery and typically be heavy gauge for high current applications.
② BATT-	Could be labeled as "Neg", "Field" or "F". This will connect to ground. Some alternator may not have this as they will be directly grounded to the engine.
③ IGN	Could be labeled "IGN" or "L" and will likely be the smaller terminal. This connects to the ignition circuit or dashboard warnings signs. This is where you will want to splice the D+ ignition cable.

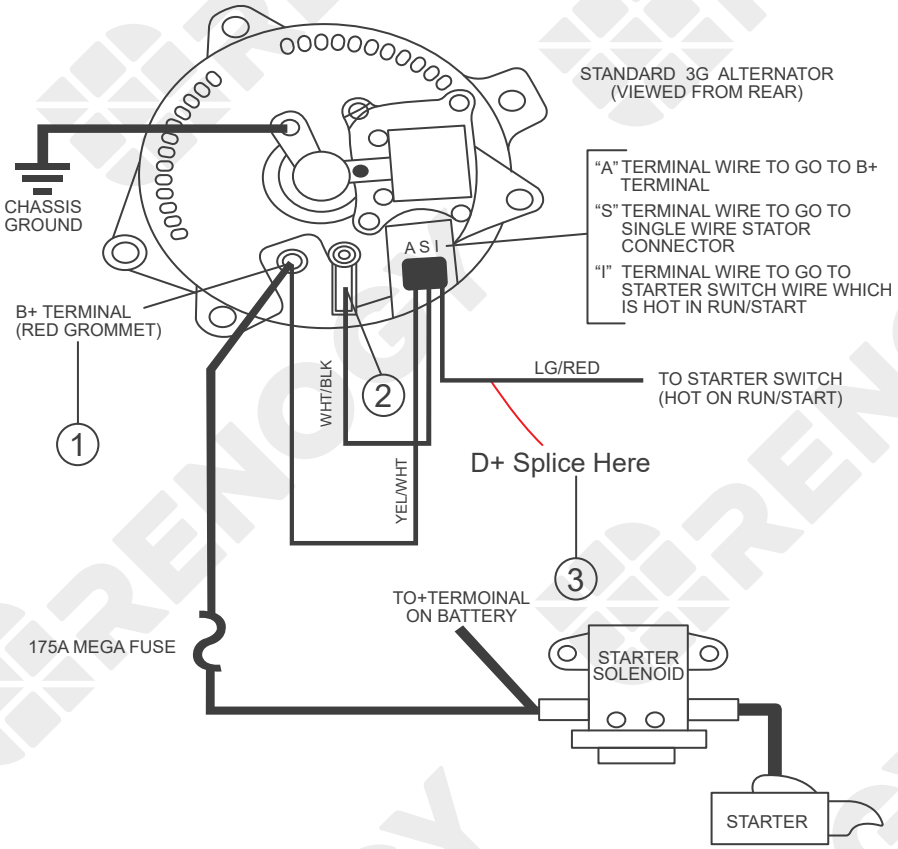

Engine Bay Fuse Block Recommendation

Review your vehicle's fuse layout to identify a fuse location that is live when the vehicle is running with the alternator. Key positions in the ignition are typically lock, accessory, on, and start.

LOCK	Off position where no accessories will work, and steering is also likely locked.
ACCESSORY	Accessories are given power such as radio and some other small electronics.
ON	Turns on all your electronics. The key will default into this position after cranking in START. Splicing of fuse block will need to be live when the key is in reverting back to this position.
START	Cranks the engine on and reverts to ON position.

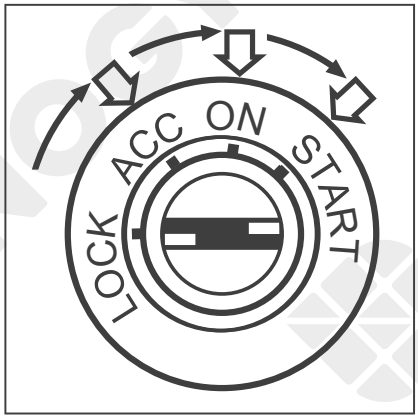

You may need to test the fuse location by checking the voltage with a multimeter and making sure it is live only when the vehicle is in the Start/Run position. This will help identify where to connect if the fuse layout does not have an IGN position. The easiest connections when splicing can be made when using a fuse holder splice connector.

System Diagram

Battery Scenario A: REGO Battery Kit | Battery Scenario B: Normal Battery Kit

Battery Scenario A: REGO Battery Kit

Using the System Combiner Box Accessory Set

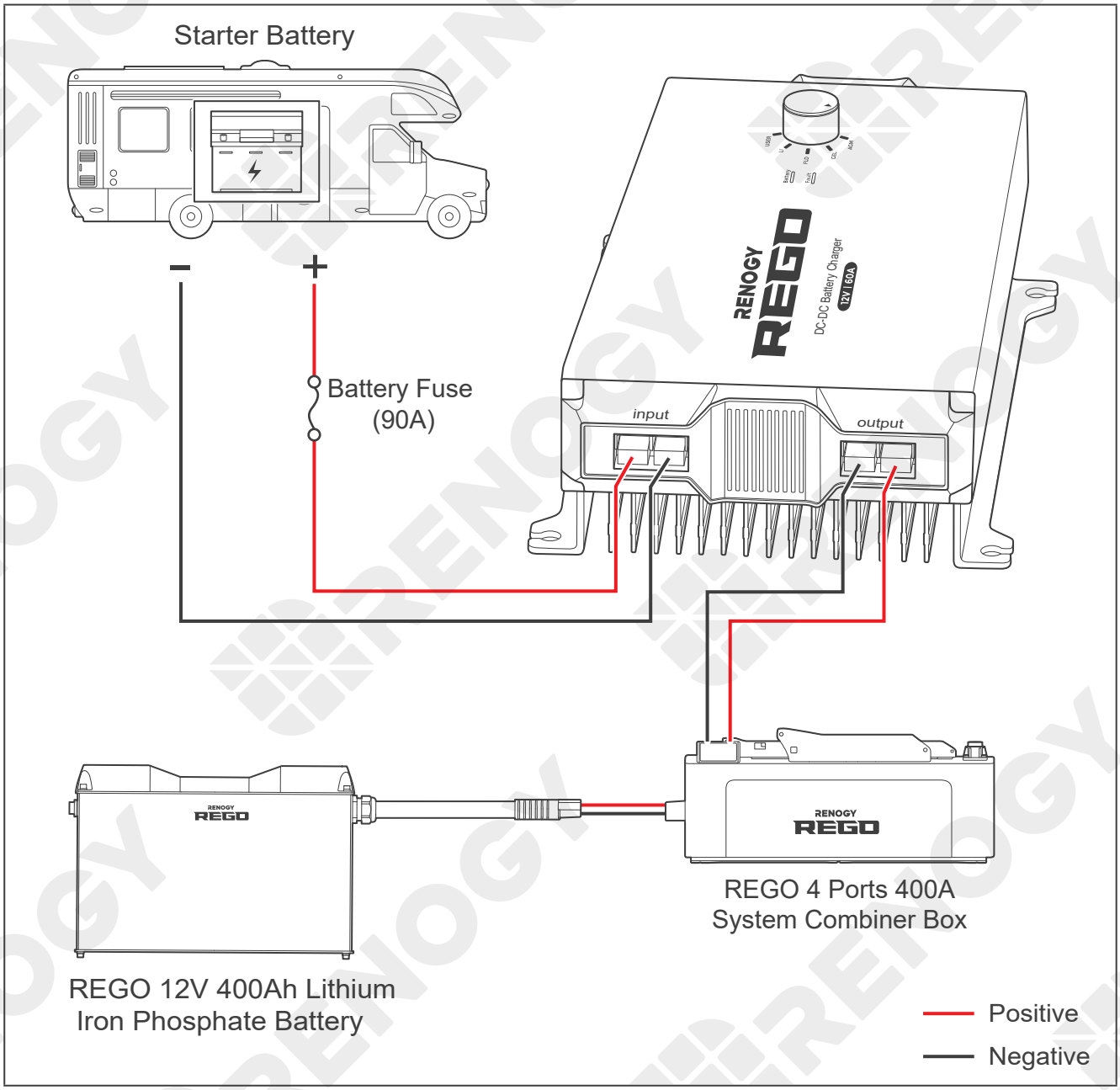

System Diagram

Battery Scenario A: REGO Battery Kit | Battery Scenario B: Normal Battery Kit

Using Positive/Negative Busbars Accessory Set

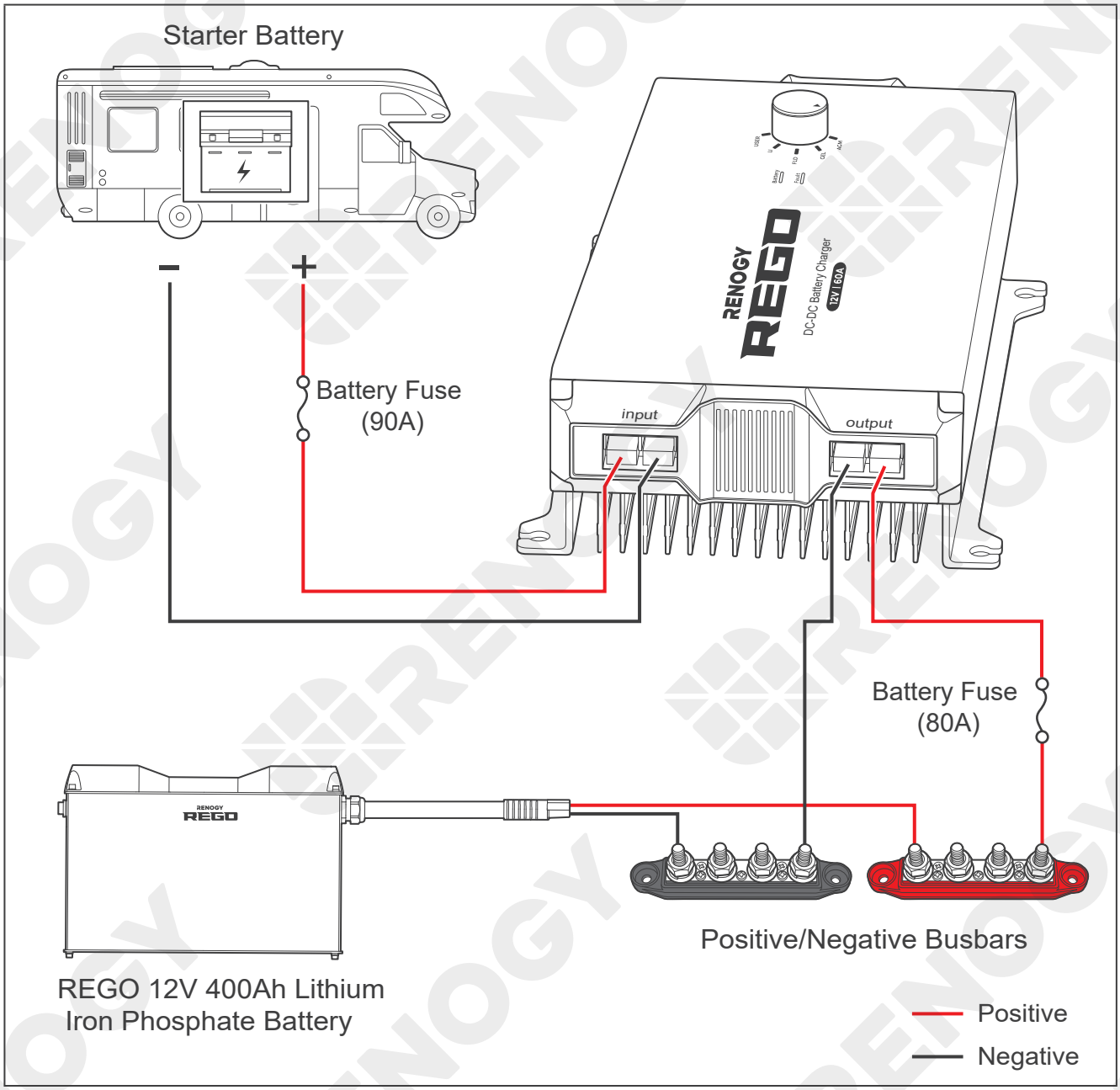

System Diagram

Battery Scenario B: Normal Battery Kit

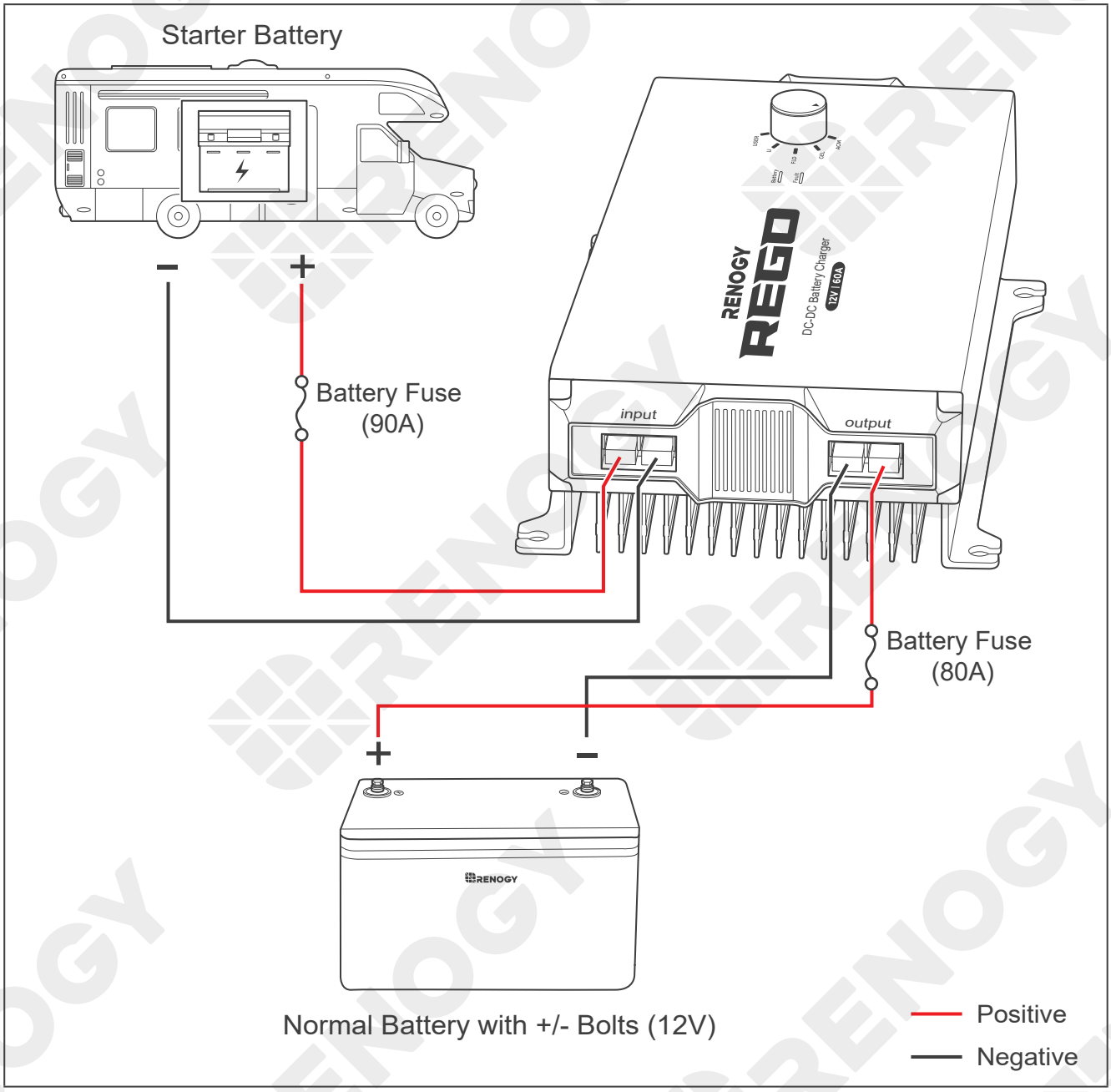

Battery Charger Wiring

NOTE

- Refer to the Recommended Cable Sizing in this manual, and select the appropriate cables according to the usage.
- Make sure that the connections of the Anderson connectors are tight and secure.

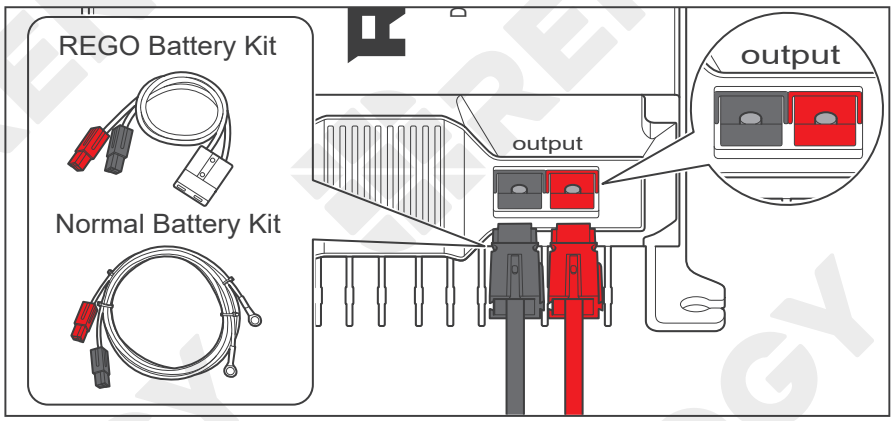

1. For the Output terminal, align the Battery Adapter Cable's Anderson PP75 connectors to the correct orientation and polarity.

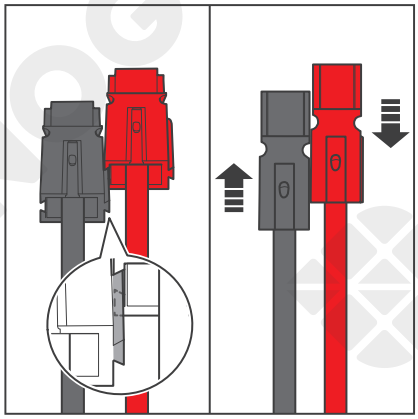

2. Bind the Anderson PP75 connectors by sliding the side grooves.

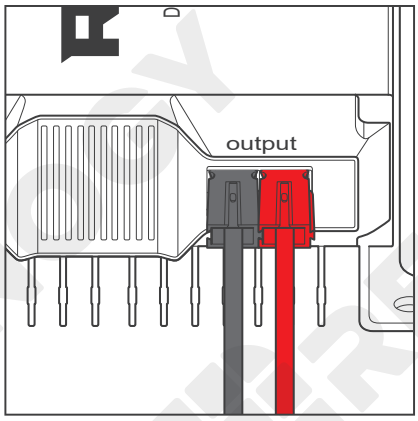

3. Insert the Anderson PP75 connectors into the Output terminal.

Battery Charger Wiring

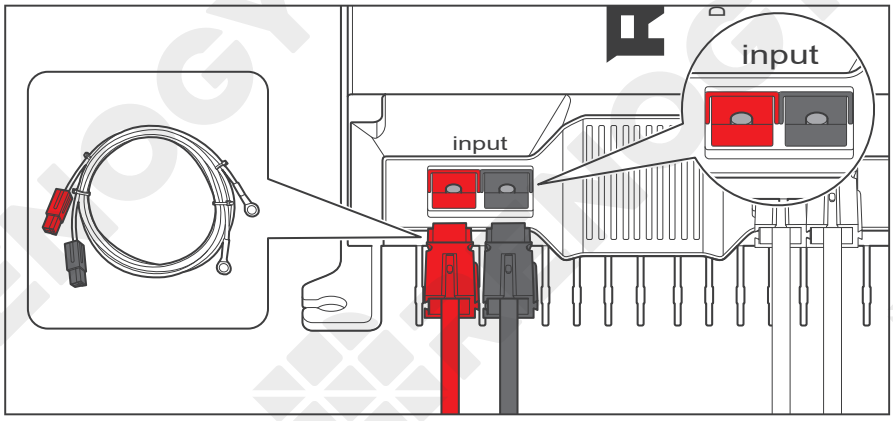

4. For the Input terminal, align the Battery Adapter Cable's Anderson PP75 connectors to the correct orientation and polarity.

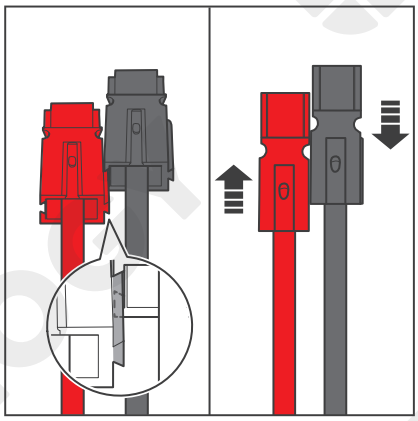

5. Bind the Anderson PP75 connectors by sliding the side grooves.

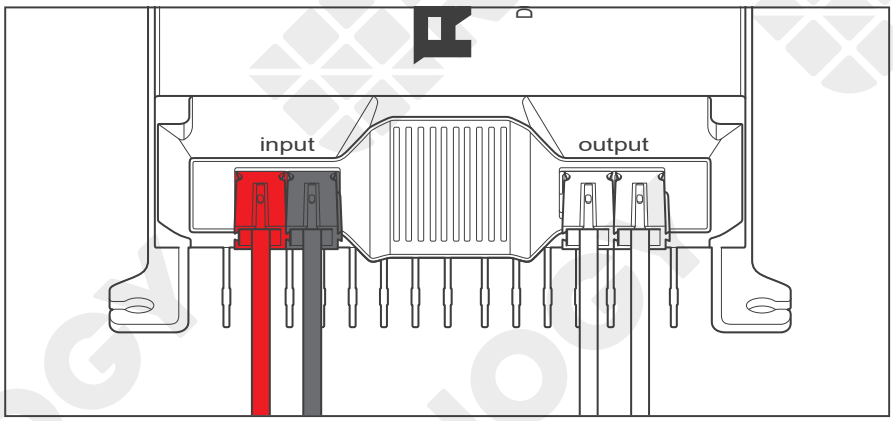

6. Insert the Anderson PP75 connectors into the Input terminal.

NOTE

- Identify the polarities (positive and negative) on the cables used for the batteries. A reverse polarity contact may damage the unit.
- Ensure that the Anderson connectors are fully seated and/or the ring terminals are securely connected.

WARNING

- Do not touch the positive and negative terminals of the battery directly with your hands at the same time.
- Do not allow the positive (+) and negative (-) terminals of the battery to contact with each other.

Battery Scenario A: REGO Battery Kit

Using the System Combiner Box Accessory Set

NOTE

- Read the user manual of REGO 4 Ports 400A System Combiner Box carefully before wiring.

Using Battery Adapter Cable (Anderson PP75 to Anderson 120 Adapter Cable)

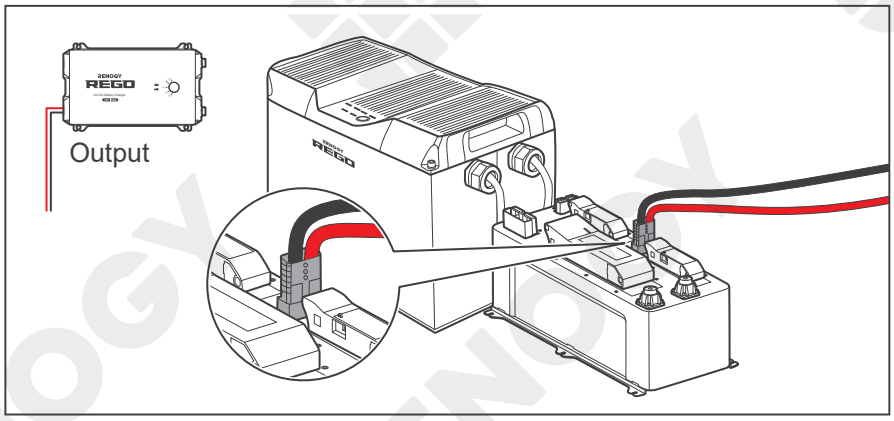

1. Insert the Anderson 120 connector of the Battery Adapter Cable (output) to the System Combiner Box.

NOTE

- If the devices are connected to the Anderson connectors of the System Combiner Box, install a 80A NH fuse in the top NH fuse disconnect switch.

Using Battery Adapter Cable (Anderson PP75 to Ring Terminal Adapter Cable)

NOTE

- Select the appropriate wrench according to positive/negative wire fixing bolt specifications of the System Combiner Box.

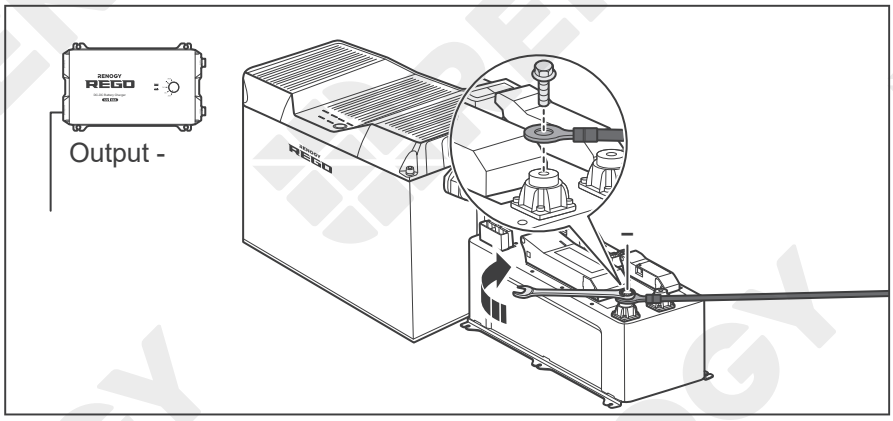

1. Attach the ring terminal of the negative Battery Adapter Cable (output) to the negative System Combiner Box and tighten the wire retaining bolt with a wrench.

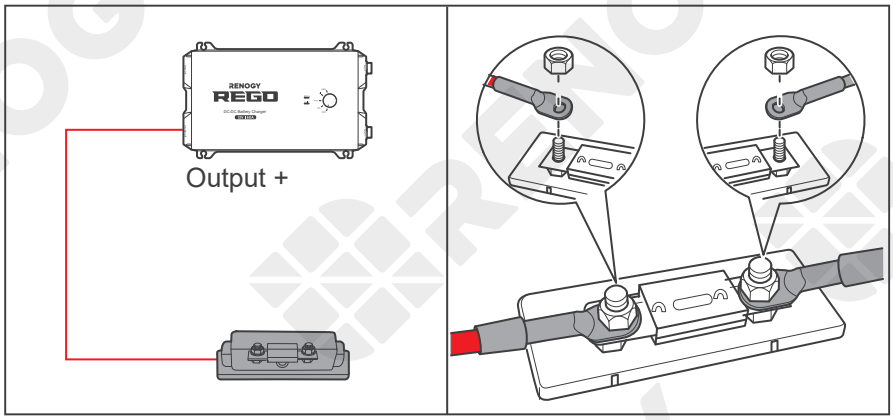

2. For your safety, it is recommended to use a battery fuse (80A). Connect the positive Battery Adapter Cable (output) to one end of the battery fuse. Install the fuse cable on the other end of the fuse.

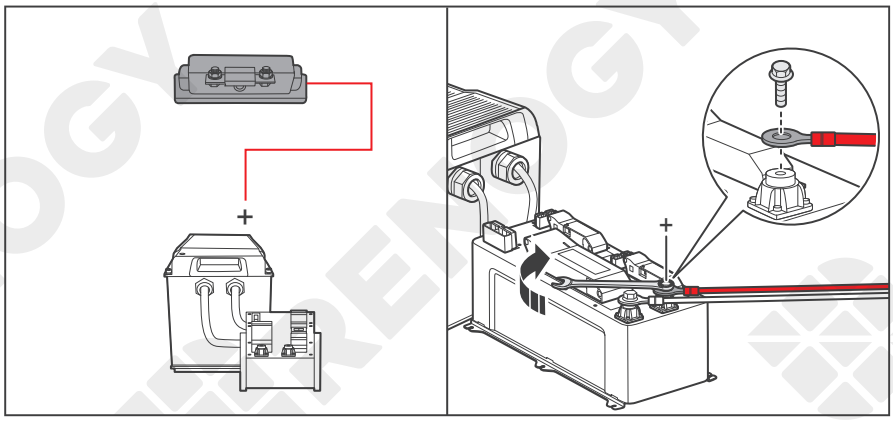

3. Attach the other ring terminal of the other end of fuse cable to the poisitive terminal of the System Combiner Box and tighten the wire retaining bolt with a wrench.

Using Positive/Negative Busbars Accessory Set

NOTE

- Select the applicable wrench according to wire fixing bolt specifications of Positive/ Negative Busbars.

WARNING

- Select the right size of positive/negative sink according to the maximum continuous charging/discharging current of the battery operation.

Essential Accessories

Gray Anderson 350 Connector to Ring Terminal Adapter Cable
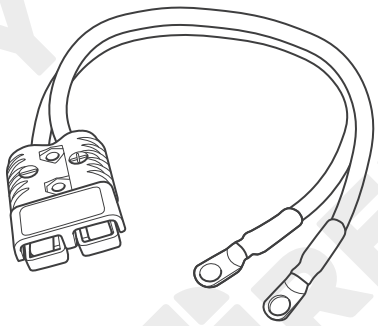

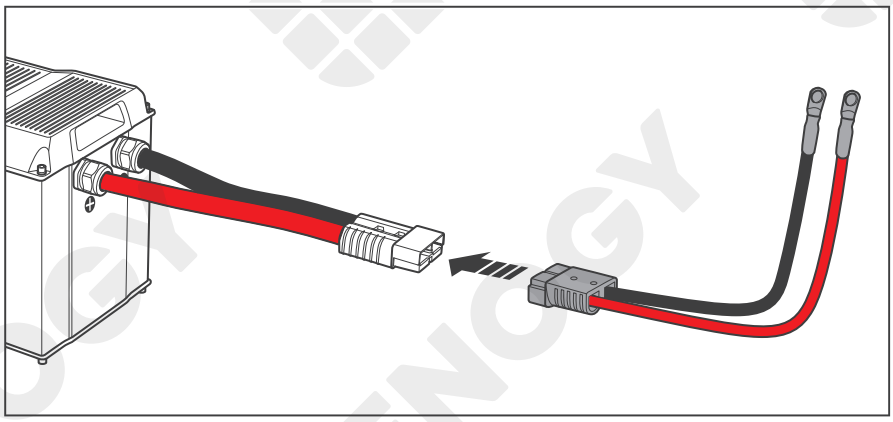

1. Connect the Anderson Connectors of the batteries to the Adapter Cables (sold separately).

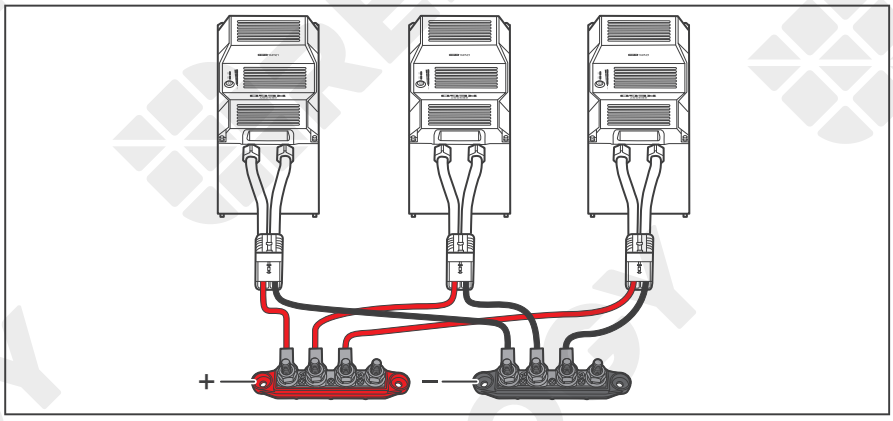

2. Connect the positive and negative ring terminals of the Adapter Cables to the Positive and Negative Busbars (not included) respectively.

Auxiliary Battery Wiring

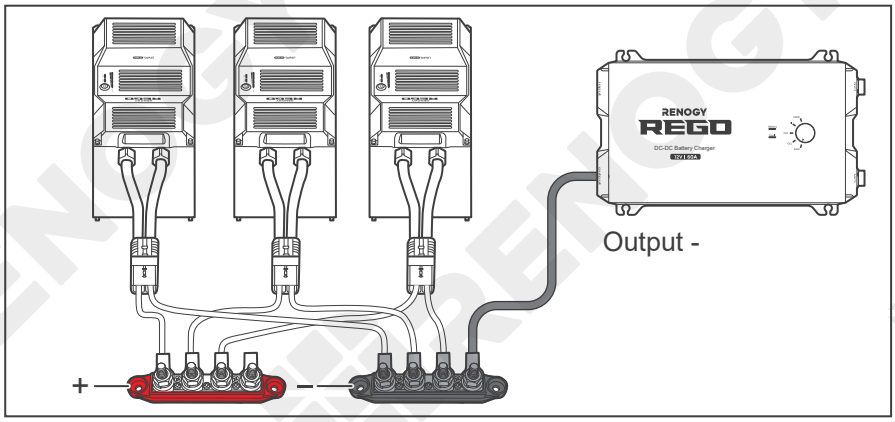

3. Attach the ring terminal of the negative Battery Adapter Cable (output) to the negative battery bolt and tighten the wire retaining bolt with a wrench.

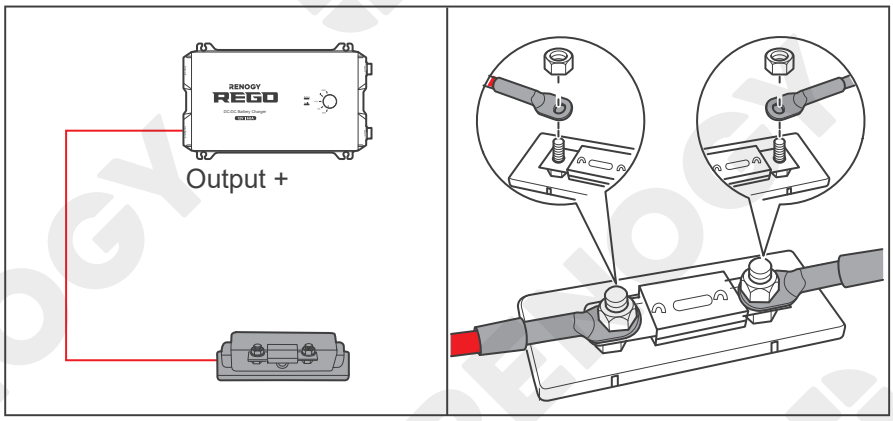

4. For your safety, it is recommended to use a battery fuse (80A). Connect the positive Battery Adapter Cable (output) to one end of the battery fuse. Install the fuse cable on the other end of the fuse.

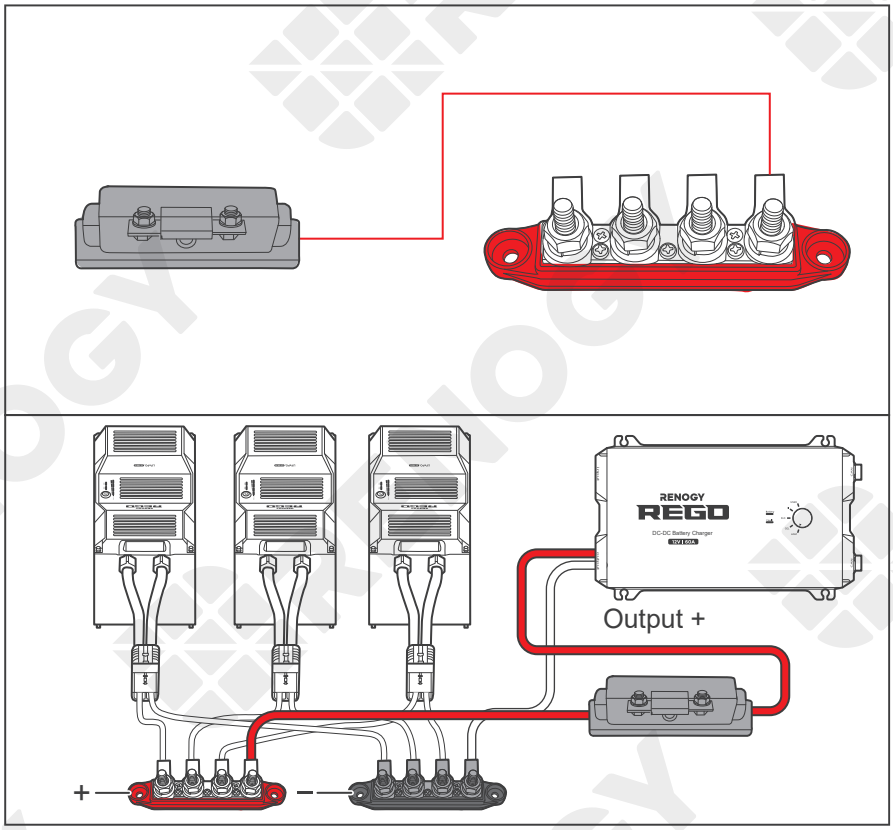

5. Attach the ring terminal of the other end of fuse cable to the Positive Busbar and tighten the wire retaining bolt with a wrench.

Battery Scenario B: Normal Battery Kit

NOTE

- Select the appropriate wrench according to the battery positive/negative wire fixing bolt specifications.

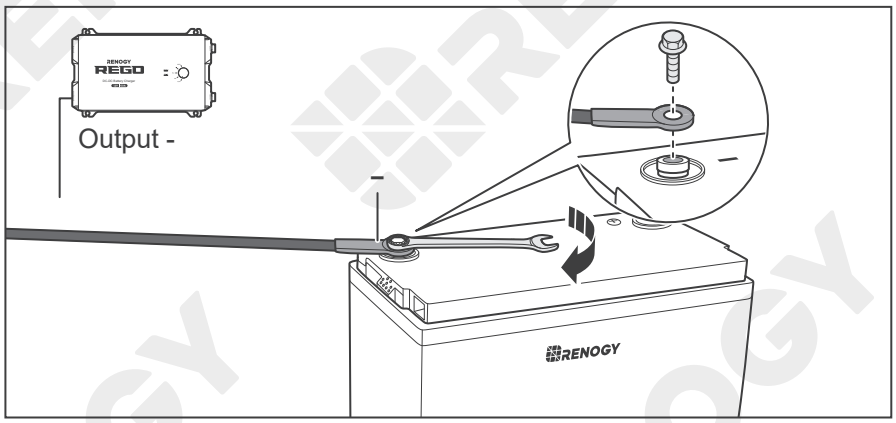

1. Attach the ring terminal of the negative Battery Adapter Cable (output) to the negative terminal of Normal Battery. Tighten the wire retaining bolt clockwise with a wrench.

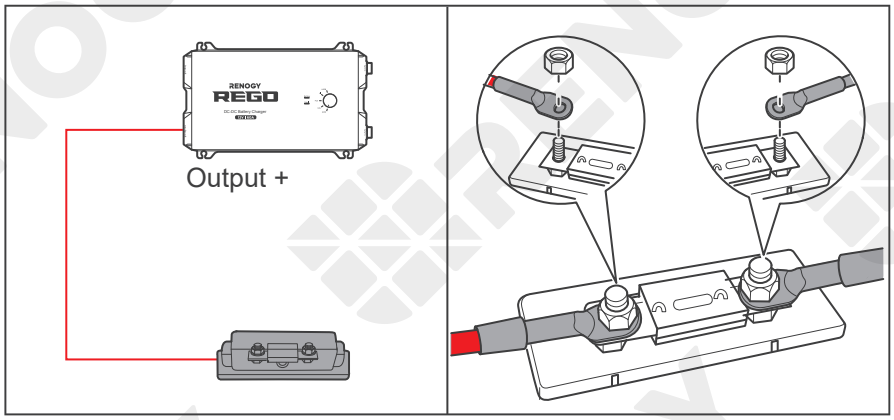

2. For your safety, it is recommended to use a battery fuse (80A). Connect the positive Battery Adapter Cable (output) to one end of the battery fuse. Install the fuse cable on the other end of the fuse.

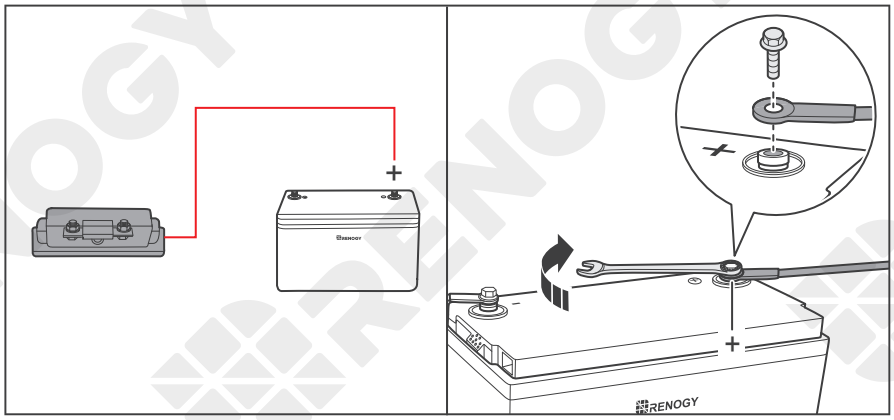

3. The other ring terminal of the fuse cable is connected to the positive terminal of the Normal Battery. Tighten the wire retaining bolt clockwise with a wrench.

Battery Indicator

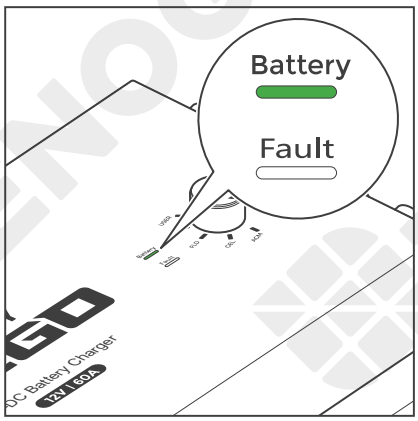

Once the battery wiring is completed correctly and the battery is turned on, the Battery indicator of the battery charger lights up green.

When the battery is performing normally, the Battery indicator may not light up. This means the battery charger needs troubleshooting. For details, contact our customer service through renogy.com/contact-us/.

Input Wiring

REGO 12V 60A DC-DC Battery Charger can be directly connected to the vehicle's starter battery (12V).

NOTE

- Select the appropriate wrench according to the battery positive/negative wire fixing bolt specifications.
- Ensure that the ring terminals are securely connected.

WARNING

- Identify the polarities (positive and negative) on the cables used for the batteries. A reverse polarity contact may damage the unit.

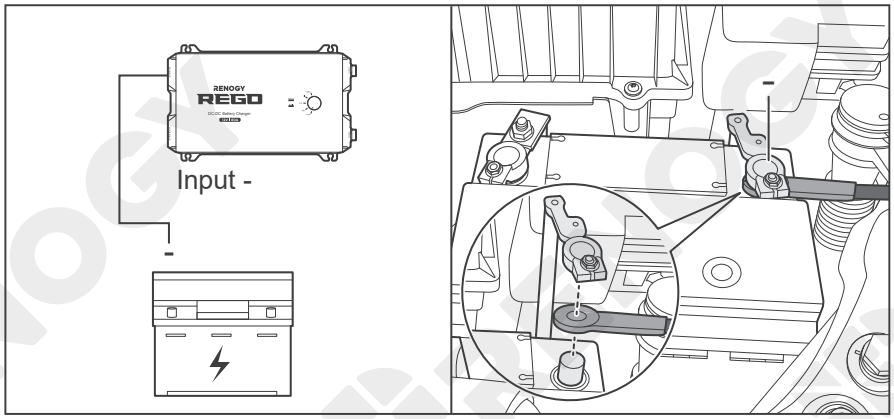

1. Attach the ring terminal of the negative Battery Adapter Cable (input) to the negative bolt of the starter battery.

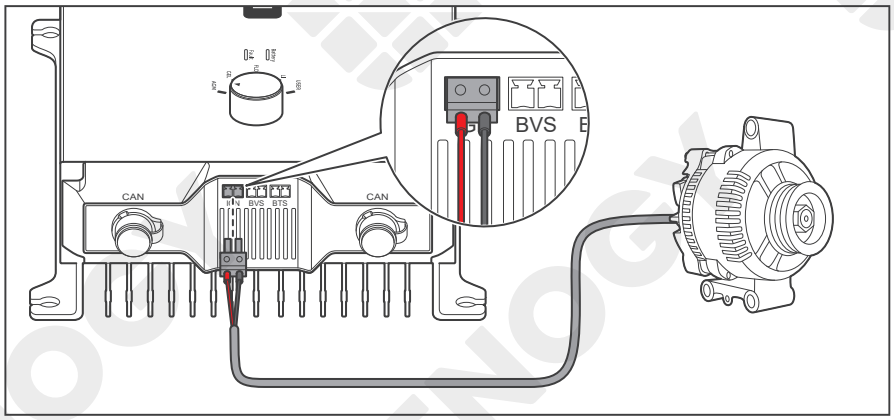

2. The traditional alternator does not need to be connected to the IGN Signal Wire. If the DC alternator of the vehicle is a smart alternator, insert the IGN Signal Wire connector into IGN signal wire port, and then connect the other end to the smart alternator's ignition signal port.

Input Wiring

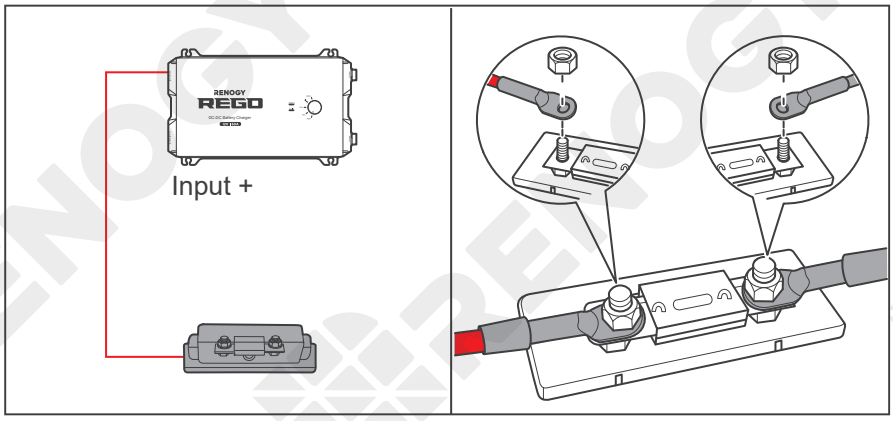

3. For your safety, it is recommended to use a battery fuse (90A). Connect the positive Battery Adapter Cable (input) to one end of the battery fuse. Install the fuse cable on the other end of the fuse.

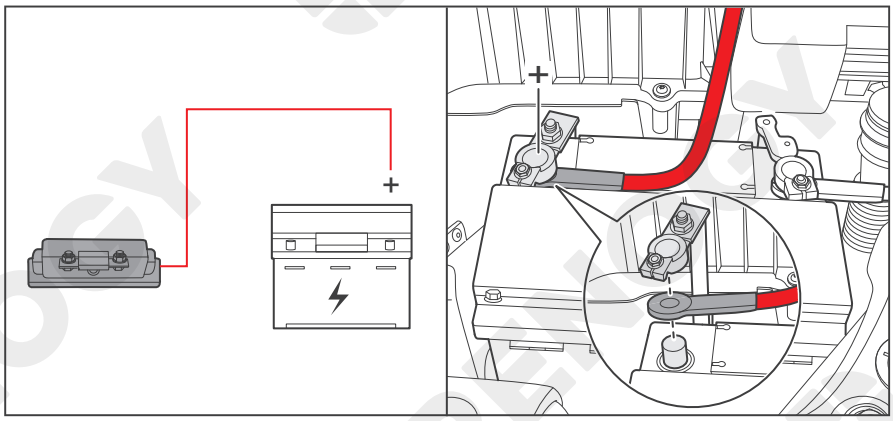

4. Attach the other ring terminal of fuse cable to the positive terminal of the starter battery.

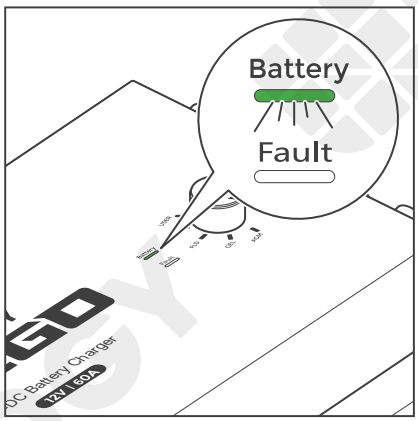

If the starter battery voltage reaches the working condition of the battery charger, after waiting for 15s, the battery indicator flashes green and the battery charger starts to work. If the battery indicator does not flash, it means that the battery charger needs troubleshooting. For more technical instructions, contact our customer service through renogy.com/contact-us/.

If the starter battery voltage does not meet the working requirements of the battery charger, the battery charger will not work and the Battery indicator will not flash.

Mounting

NOTE

- Make sure that the battery charger is installed firmly to prevent it from falling off.

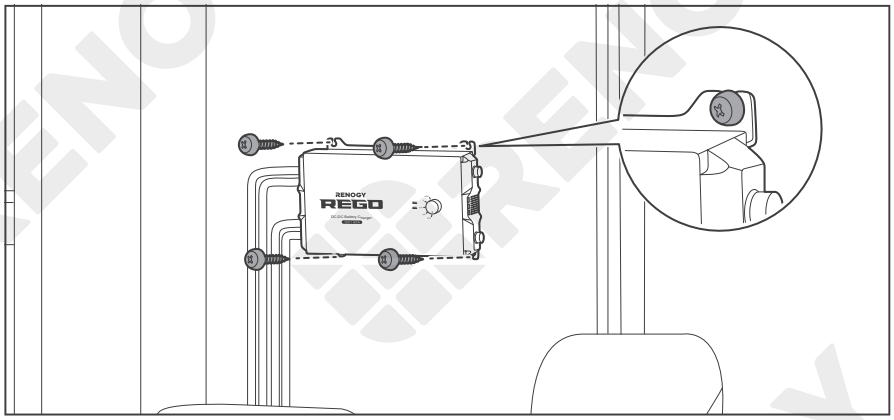

1. Place the battery charger against a flat surface and secure it with included screws.

Temperature Sensor

The temperature sensor measures the temperature of the battery and provides the battery charger with a charge voltage calibration mechanism to ensure that the battery charger can properly charge the battery within the operating temperature from -4°F to 140°F or -20°C to 60°C.

CAUTION

- Do not use the temperature sensor on a LiFePO4(LFP) battery which comes with a battery management system(BMS).

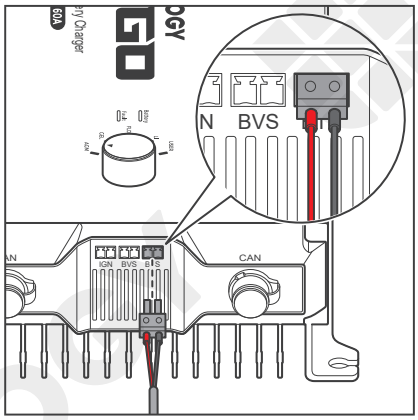

1. Insert the temperature sensor terminal block into the BTS port of the battery charger.

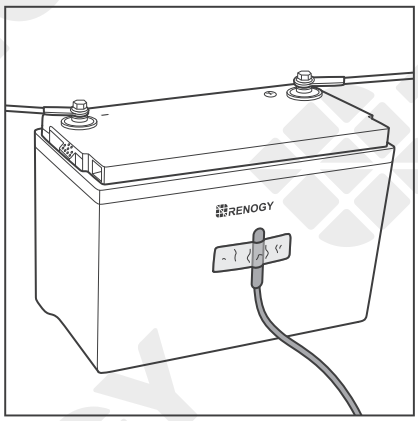

2. Adhere the sensor on the battery with insulation tape.

Voltage Sensor (Optional)

The Battery Voltage Sensor is the perfect solution by providing an accurate battery voltage to the battery charger and allowing it to adjust the charging stage precisely resulting in overall extension of your battery life.

NOTE

- The voltage sensor ring terminal is M8 (Approx. 5/16”). If the battery bolt size is small, use a gasket to fix it to prevent it from falling off.
- Identify the polarities (positive and negative) on the cables used for the batteries. A reverse polarity contact may damage the unit.

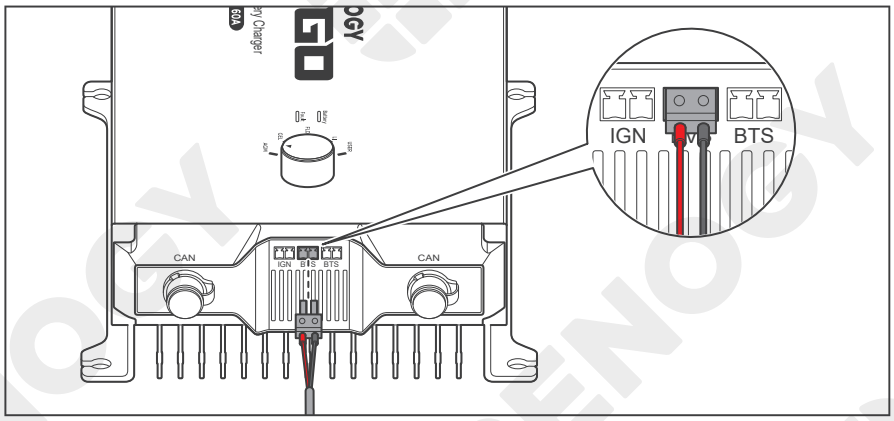

1. Insert the voltage sensor terminal block to the BVS port.

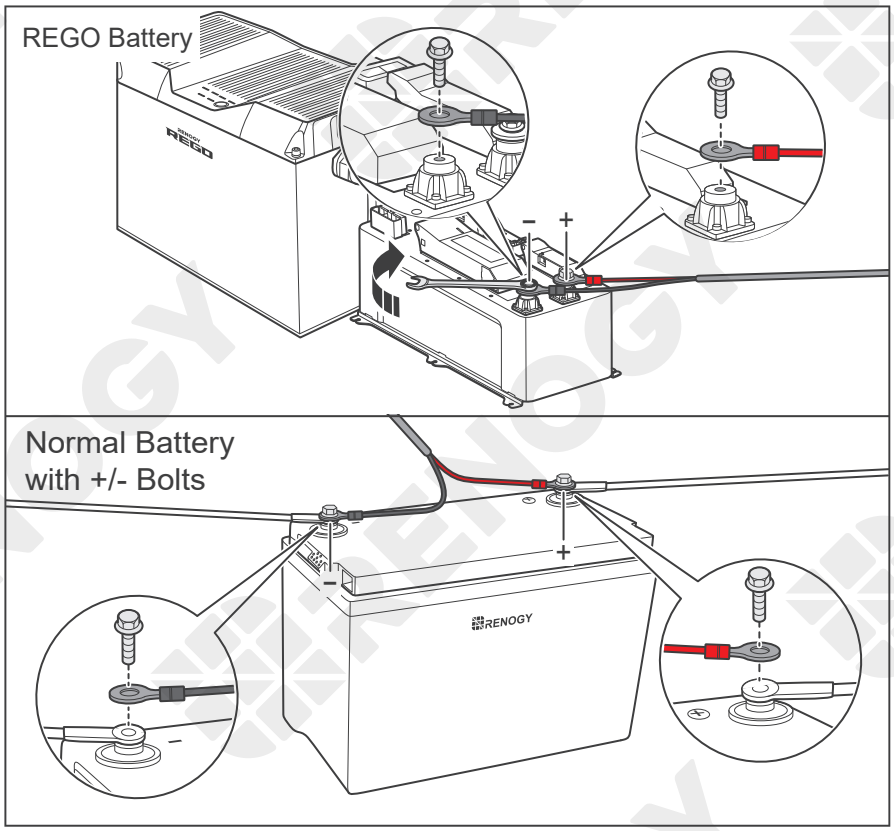

2. Connect the voltage sensor ring terminal to the positive/negative pole of the battery system.

Communication

The REGO 12V 60A DC-DC Battery Charger can communicate with other REGO devices and monitoring devices, enabling safe operation, smart control, remote monitoring, and programmable settings.

Inter-Device Communication

Depending on the installation condition, the RV-C communication connections between the battery charger and other REGO devices can be established with backbone or daisy chain topology. The inter-device communication allows the battery charger to dynamically adjust the charging profile for an optimal and safe charge.

Backbone Topology

The backbone topology applies to RVs that are integrated with RV-C buses with built-in 120Ω resistors on both ends. Check the RV user manual for details or contact the RV manufacturer if necessary.

For technical support from Renogy, contact us through renogy.com/contact-us/.

CAUTION

- Connect devices to the battery charger according to the wiring diagram provided by the RV manufacturer.

Choose proper communication cables according to your specific demands.

Recommended Accessories

LP16 Plug (7-Pin) to Bare Drop Cables	Drop Plugs	Split Joint Pilers
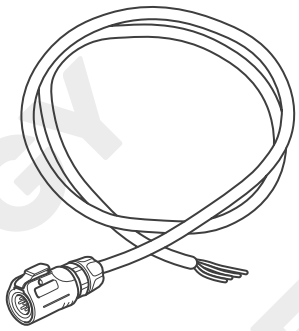	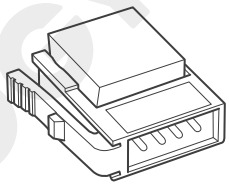	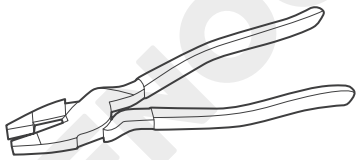

NOTE

- The drop cable shall not exceed 19.6 feet (6 m), and the RV-C bus shall not exceed 98.4 feet (30 m).
- Different drop sockets are used on the RV-C bus by different RV manufacturers. Select the Drop Plugs that match the drop sockets for the inter-device communication connections. If you are not sure about the Drop Plug selection, check with the RV manufacturer. This user manual takes the Mini-Clamp II plug (4-pin) as an example.
- Different Drop Plugs follow different pinouts. Crimp the Drop Plugs on the Drop Cables following the correct pinout. If you are not sure about the Drop Plug pinout, check with the

RV manufacturer. This user manual takes the pinout of the Mini-Clamp II plug (4-Pin) as an example.

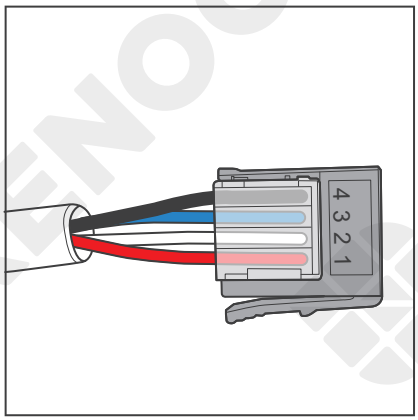

1. Insert the bare wires of the Drop Cables (sold separately) all the way into the wire ports of the Drop Plugs (not included) following the Drop Plug pinout. The red PS+ wire goes to pin 1, the white CAN_H wire goes to pin 2, the blue CAN_L wire goes to pin 3, and the black PS- wire goes to pin 4.

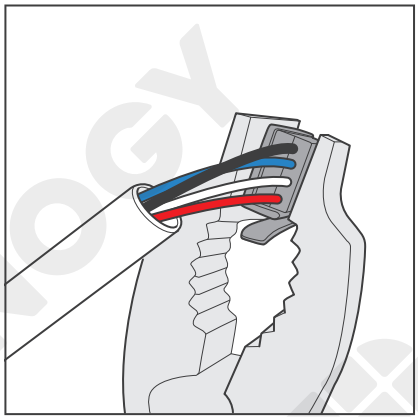

2. Squeeze the crimp areas of the Drop Plugs with the Split Joint Pilers.

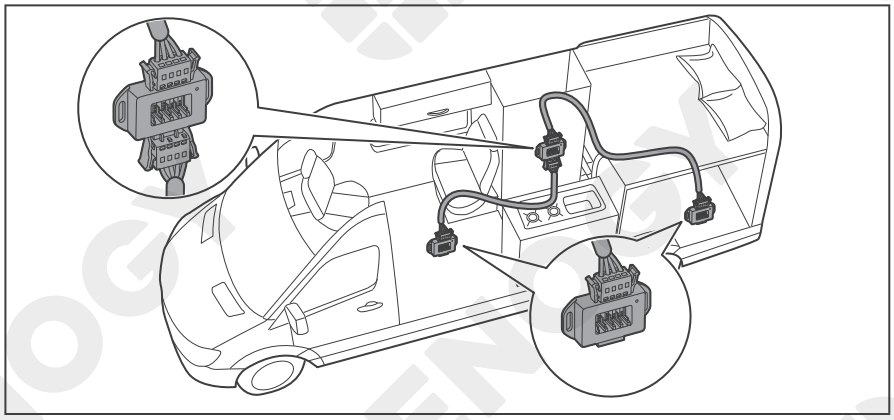

3. Locate the drop tap (not included) on the RV-C bus that is the closest to the installation site of the battery charger. The drop taps are usually located above the entry door, in the bathroom, or under the bed in the RV.

NOTE

- If unable to locate the drop taps, contact the RV manufacturer for help.

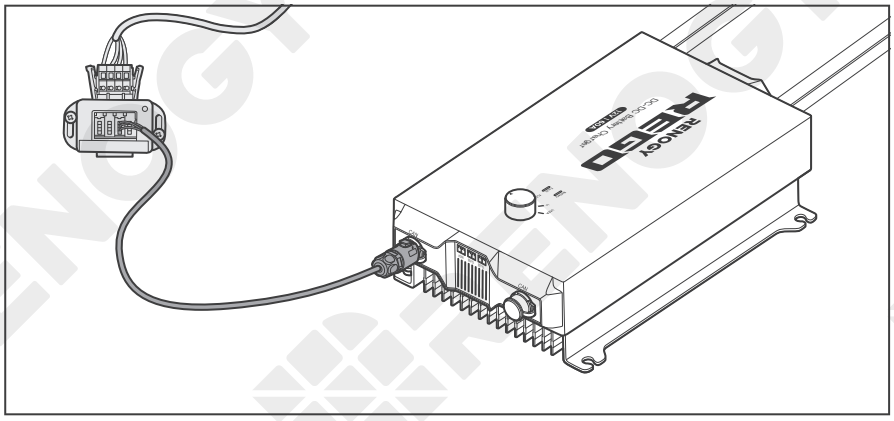

4. Connect either of the CAN Communication Ports of the battery charger and other REGO devices to the drop sockets on the drop tap with the Drop Cables.

NOTE

- Different drop taps are used on the RV-C bus by different RV manufacturers. This user manual takes the 4-socket drop tap as an example.

Daisy Chain topology

The daisy chain topology applies to RVs that are not integrated with RV-C buses.

Recommended Accessories

LP16 Plug (7-Pin) Communication Cable(s)	LP16 Terminator Plugs (7-Pin)
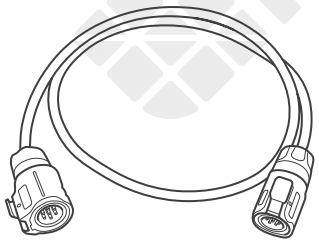	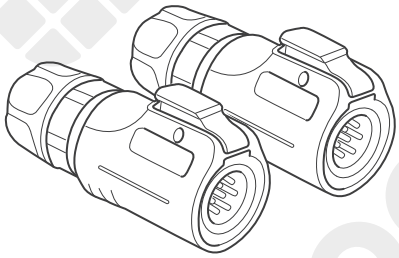

NOTE

- The communication cable can not exceed 19.6 feet (6 m).

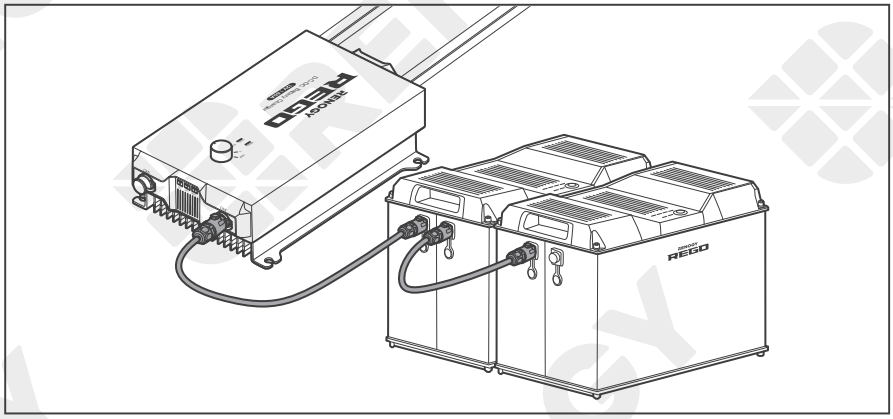

1. Connect REGO devices in series through either of the CAN Communication Ports with the Communication Cable(s) (sold separately).

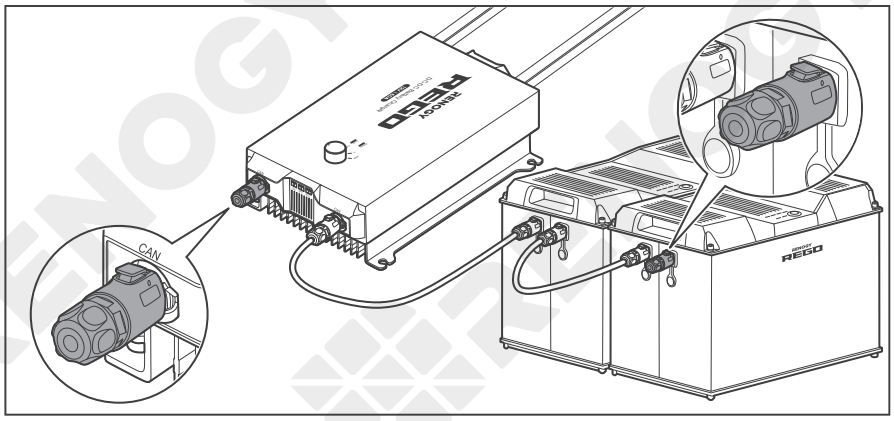

2. Plug the Termionator Plugs (sold separately) into the vacant CAN Communication Ports on the first and last REGO devices.

Monitoring Device Communication

Depending on the application, the short-range or long-range communication connections can be established between the battery charger and monitoring devices. The monitoring device allows for the monitoring and programming of the battery charger or even the complete system.

NOTE

- Scan the QR code on the last page of the user manual to download the DC Home app.
- Make sure that the battery charger is turned on before the connection.

Short-Range Monitoring

If only short-range monitoring is required, connect the battery charger to the DC Home app directly through Bluetooth.

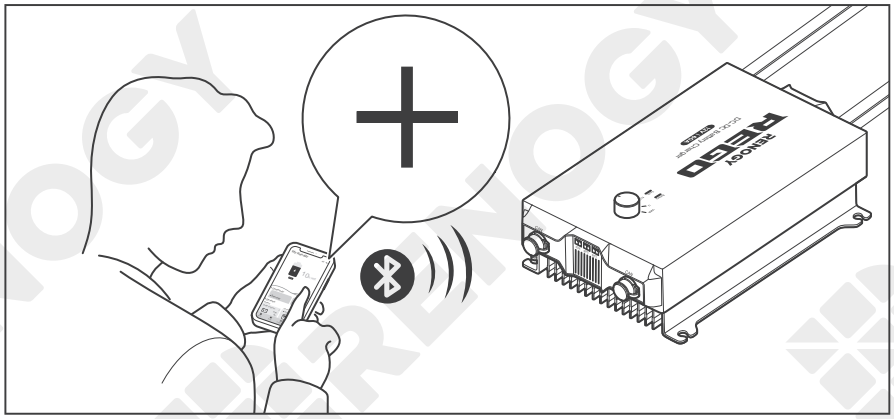

Open the DC Home app. Tap **+** to search for new devices. Add the newly found battery charger to the device list. Monitor the battery charger on the device page.

NOTE

- Keep the phone within 10 feet (3 m) of the battery charger.

Long-Range Monitoring

If long-range communication and programming are required, connect the battery charger to Renogy ONE through Bluetooth or wires, and the Renogy ONE to the DC Home app through Wi-Fi.

Recommended Accessories

Renogy ONE
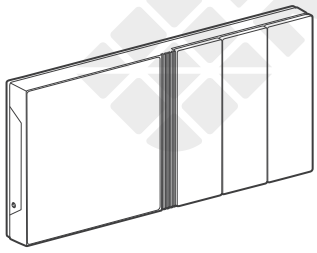

NOTE

- Make sure that the Renogy ONE is powered on before the connection.

INFO

- Read the user manual of Renogy ONE at renogy.com before the connection.

Wireless connection

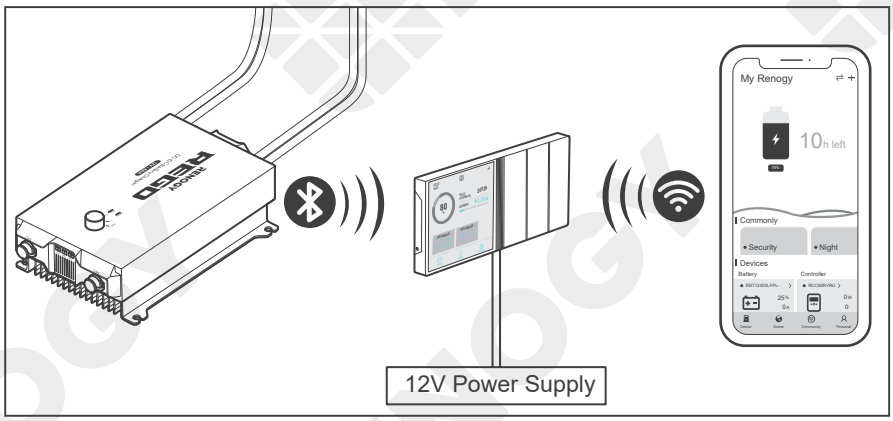

Connect the battery charger to the Renogy ONE (sold separately) through Bluetooth, and pair the Renogy ONE with the DC Home app through Wi-Fi.

Monitor the battery charger on the Renogy ONE or the DC Home app.

NOTE

- Ensure the battery charger does not communicate with any other device.
- Keep the phone within 10 feet (3 m) of the battery charger.

Wired connection

Recommended Accessories（Backbone Topology）

RJ45 Plug to Bare Drop Cable	Common Drop Tap
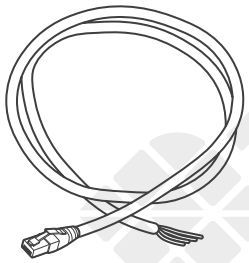	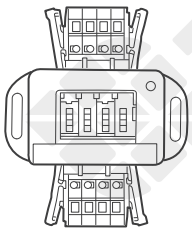

NOTE

- The communication cable can not exceed 19.6 feet (6 m).

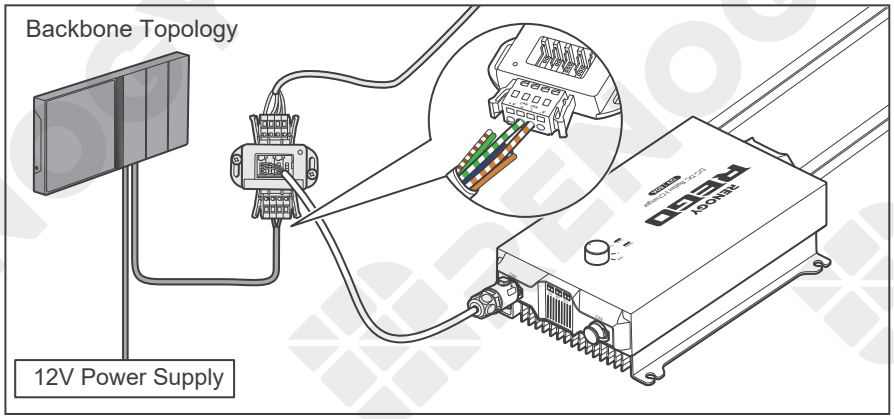

1. Replace the terminated drop tap at either end of the RV-C bus with the Common Drop Tap (not included). Secure the bare wires of the Drop Cable (not included) onto the terminal block plug of the Common Drop Tap following the terminal block plug pinout. Plug the Drop Cable to the RJ45 port of Renogy ONE.

NOTE

- Different terminal block plugs are used on different Common Drop Taps and follow different pinouts. Connect the Drop Cable to the terminal block plug of the Common Drop Tap following the correct pinout. If you are unsure about the pinout of the terminal block plug, contact the RV manufacturer. This user manual takes the pinout of the MCS MIDI Classic terminal block plug (4-Pin) as an example.
- Refer to the Backbone Topology section for more instructions.

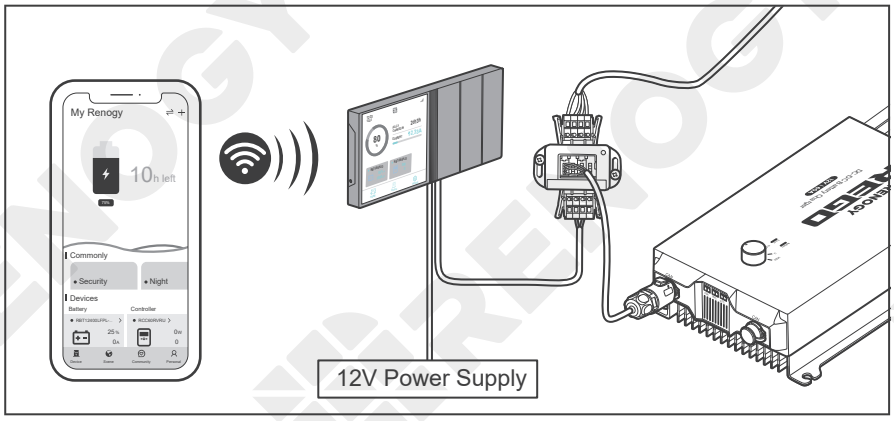

2. Monitor and program the complete system on Renogy ONE or the DC Home app.

Recommended Accessories（Daisy Chain Topology）

LP16 Plug (7-Pin) to RJ45 Communication Adapter Cable
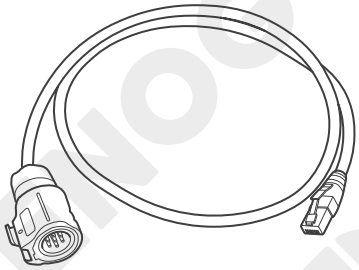

NOTE

- The communication cable can not exceed 19.6 feet (6 m).

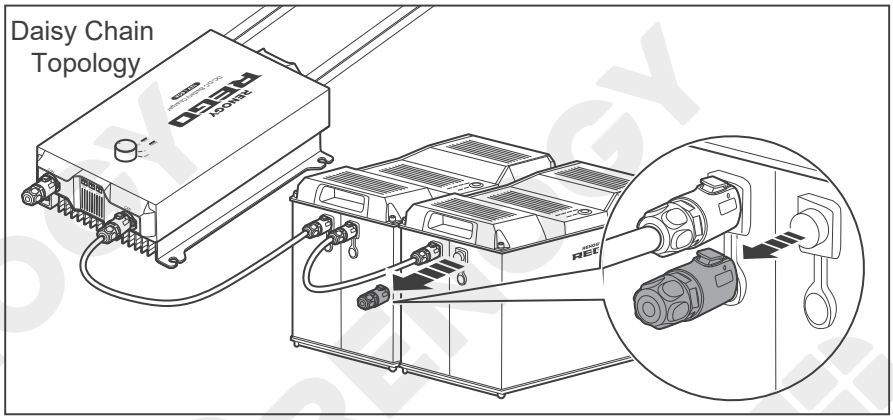

1. Remove the Terminator Plug from the REGO device at either end of the daisy chain.

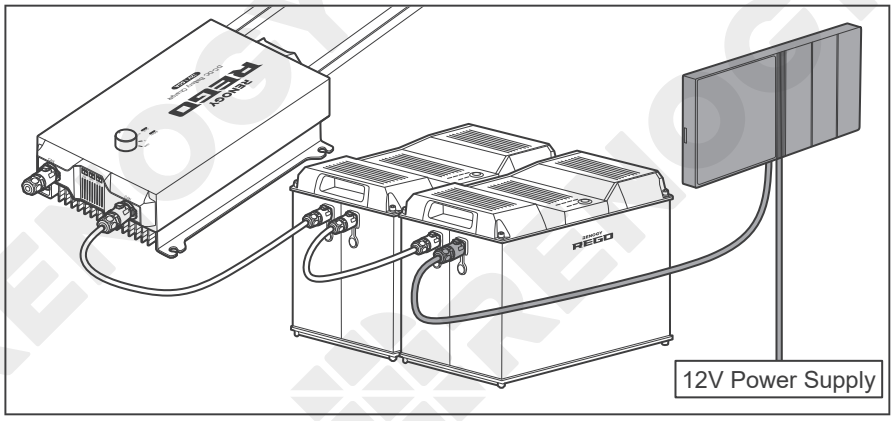

2. Connect the Renogy ONE to the vacant CAN Communication Port on the REGO device with the Communication Adapter Cable (sold separately).

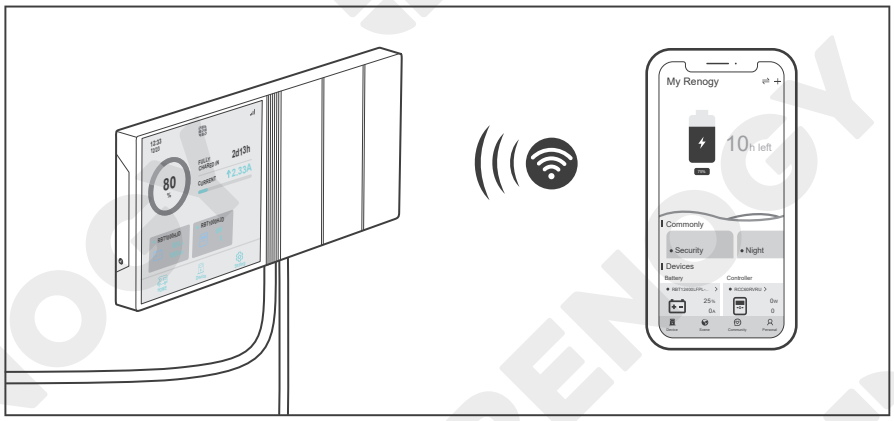

3. Pair Renogy ONE with the DC Home app. Monitor and program the complete system on the Renogy ONE or the DC Home app.

Selecting the Battery Type

The battery charger is simple and easy to use. The knob with five gears makes the selection of battery type more convenient.

The default battery type of the battery charger is AGM/SLD. After the wiring of the battery charger output is completed, manually set the battery type according to needs.

WARNING

- Refer to battery manufacturer technical specifications when choosing a preset battery. Incorrect battery type selection resulting in damage will not be covered by warranty.

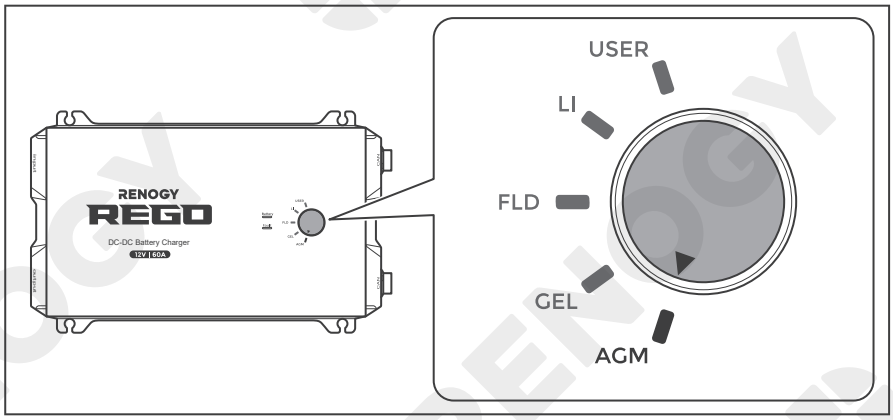

1. If the auxiliary battery is an AGM battery, turn the knob to AGM.

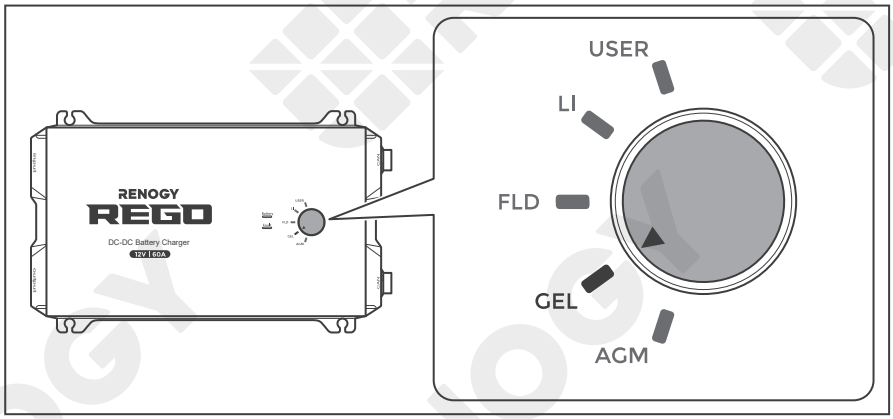

2. If the auxiliary battery is Gel battery, turn the knob to GEL.

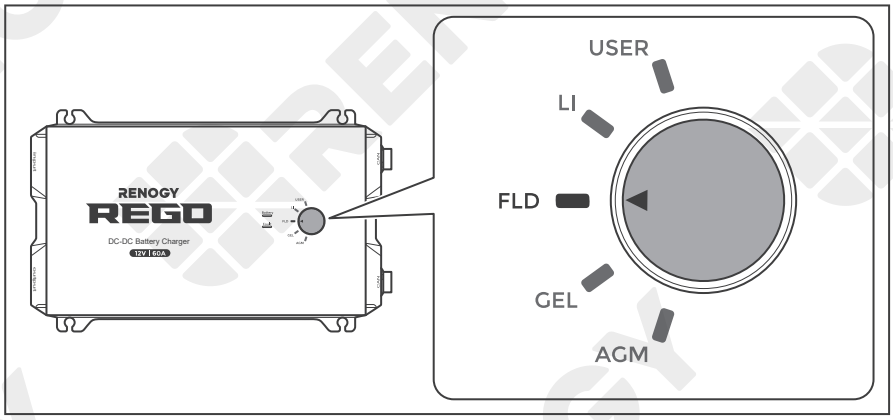

3. If the auxiliary battery is Flooded battery, turn the knob to FLD.

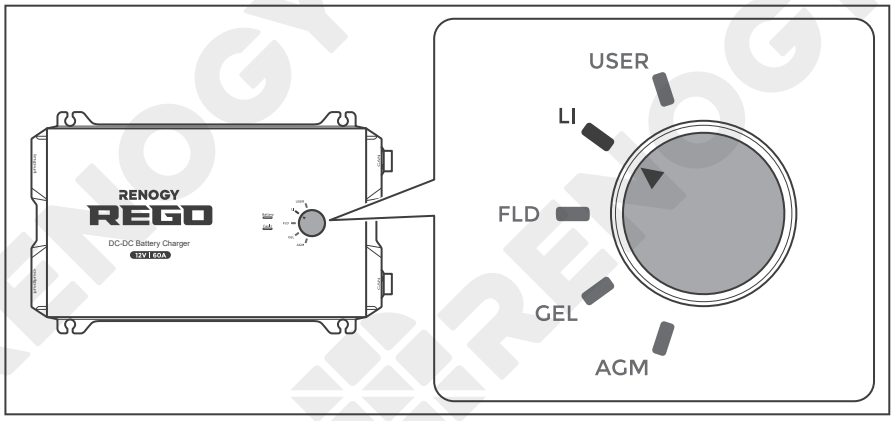

4. If the auxiliary battery is Lithium battery, turn the knob to LI.

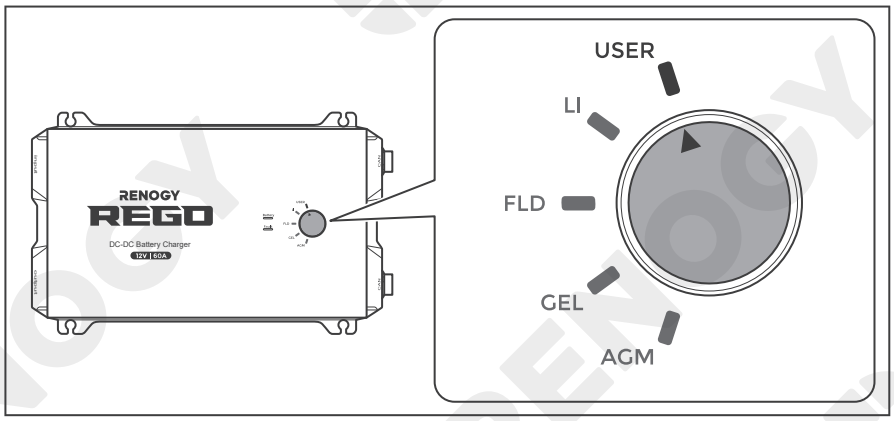

5. If multiple parameters of the battery need to be programmed, turn the knob to USER to enter custom mode.

NOTE

- After entering the custom mode, you need to use the DC Home app to program the battery parameters. Refer to the User Mode of this chapter for details.

Battery Charging Parameters

WARNING

- Before modifying battery parameters, check the table below first. Incorrect parameter setting will damage the device and void the warranty.

Battery Type / Parameters	AGM/SLD	GEL	FLOODED	LI (LFP)	USER (Default)	USER (Recommended)
Overvoltage Shutdowm	16.0V	16.0V	16.0V	16.0V	[16.0V]	—
Overvoltage Warning	15.5V	15.5V	15.5V	14.8V	[15.5V]	—
Equalization Volatge	—	—	14.8V	—	14.6V	9.0-17.0V
Boost Voltage	14.6V	14.2V	14.6V	14.4V	14.2V	9.0-17.0V
Float Voltage	13.8V	13.8V	13.8V	—	13.8V	9.0-17.0V
Boost Return Voltage	13.2V	13.2V	13.2V	13.6V	13.2V	9.0-17.0V
Low Voltage Reconnect	—	—	—	—	—	—
Undervoltage Recover	—	—	—	—	—	—
Undervoltage Warning	12.0V	12.0V	12.0V	12V	12.0V	9.0-17.0V
Undervoltage Shutdown Warning	11.1V	11.1V	11.1V	11.4V	[11.1V]	—
Boost Duration	120 min*	120 min*	120 min*	—	120 min*	10-300 min
Equalization Duration	—	—	120 min	—	120 min	0-300 min
Equalization Interval	0 days**	0 days**	30 days	—	30 days	0-250 days
Temperature Compensation	-3 mV/°C/2V	-3 mV/°C/2V	-3 mV/°C/2V	—	-3 mV/°C/2V	—

NOTE

- * means that if the backup battery type is lead-acid battery and the charging current is less than 3A, the battery charger will automatically switch to float charging after 30 seconds.
- ** means no Equalization Charging.
- Parameters in gray cannot be set manually.
- Parameters in square brackets ([ ]) are automatically adjusted according to the relevant settings, and cannot be set directly.

- When the battery voltage reaches the Undervoltage Shutdown Warning value, the Battery Status Indicator slow flashes red. Please disconnect all loads from the battery, and charge it immediately.

User Mode

WARNING

- Before modifying battery parameters in user mode, check the table below and consult the battery manufacturer to check whether modification is allowed. Incorrect parameter setting will damage the device and void the warranty.

<table>
<tr><th rowspan="2">Maximum Charging Current</th><th colspan="2">REGO 12V 60A DC-DC Battery Charger</th></tr>
<tr><td>Max. Charging Current: 60A</td><td>Adjustable Charging Current: 60A/50A/40A/30A/20A/10A</td></tr>
<tr><td>Equalization Voltage</td><td colspan="2">(1) For lead-acid batteries, consult the battery manufacturer to obtain the voltage value, and then complete the settings according to the feedback.
(2) Consult the battery manufacturer and check whether the equalization voltage needs to be set.
(3) If equalization charging is not required, set the voltage to boost voltage.</td></tr>
<tr><td>Boost Voltage</td><td colspan="2" rowspan="2">Consult the battery manufacturer and check if this voltage value needs to be set.</td></tr>
<tr><td>Float Voltage</td></tr>
<tr><td>Undervoltage Warning</td><td colspan="2" rowspan="4">Consult the battery manufacturer if it is necessary to set this parameter value.</td></tr>
<tr><td>Boost Duration</td></tr>
<tr><td>Equalization Interval</td></tr>
<tr><td>Equalization Duration</td></tr>
</table>

NOTE

- Make sure Bluetooth is turned on.
- Scan the QR Code on the last page of the user manual to download the DC Home app.
- The version of the DC Home app might have been updated. Illustrations in the user manual are for reference only. Follow the instructions based on the current app version.

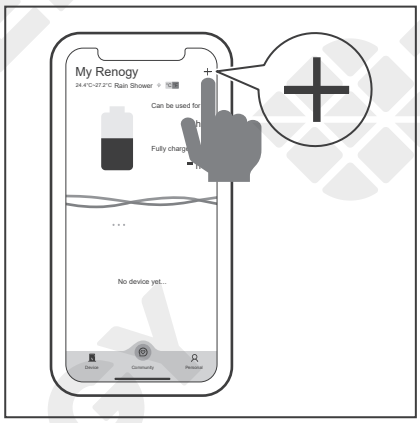

1. Open the DC Home app. Tap **+** to search for new devices.

2. Tap **Confirm** to add the newly found device to the device list.

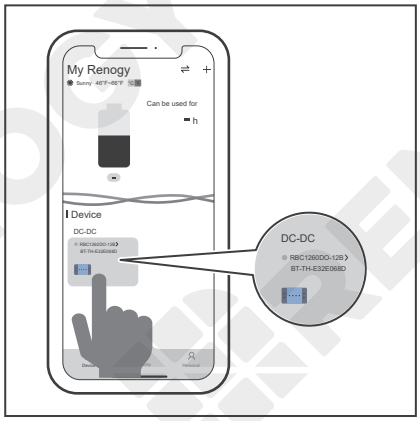

3. Tap the battery charger icon to enter the device information interface.

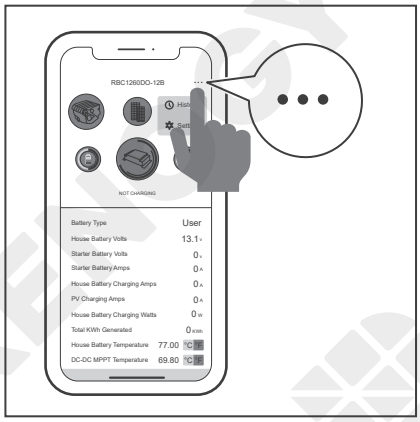

4. Tap ••• in the upper right corner.

5. Tap **Settings** to open the mode selection interface.

6. In this interface, you can customize multiple parameters of the battery. When the parameters are modified, **Setting Success** appears on the interface, indicating that the parameter setting is completed.

Charging Logic

REGO 12V 60A DC-DC Battery Charger can be directly connected to the 12V starter battery. The battery charger also supports parallel charging by using two 800W battery chargers to charge the auxiliary battery simultaneously.

Working conditions

Alternator Type	Starter Battery Voltage	
	Cut-in	Cut-off
Smart Alternator	>12.5V, for 15 seconds	<11.5V
Traditional Alternator	>13.5V, for 15 seconds	<12.7V

1. Smart Alternator: When the battery charger tests that the voltage of the starter battery is greater than 12.5V, it pauses for 15s and then starts to work and charge the auxiliary battery.
2. Traditional Alternator: When the battery charger tests that the voltage of the starter battery is greater than 13.5V, it pauses for 15s and then starts to work and charge the auxiliary battery.

Charging Logic

- **Charging the auxiliary battery**

1. Smart Alternator: After the battery charger starts to operate, it recognizes the level of the auxiliary battery automatically. If the auxiliary battery is not fully charged, the battery charger will charge the auxiliary battery. If the auxiliary battery is fully charged or the voltage of the starter battery is less than 11.5V, the battery charger will stop operating.
2. Traditional Alternator: After the battery charger starts to operate, it recognizes the level of the auxiliary battery automatically. If the auxiliary battery is not fully charged, the battery charger will charge the auxiliary battery. If the auxiliary battery is fully charged or the voltage of the starter battery is less than 12.7V, the battery charger will stop operating.
3. The maximum charging current for the battery charger to charge the auxiliary battery should be no more than 60A.

- **Charging the starter battery**

Alternator Type	Starter Battery Voltage	
	Cut-in	Cut-off
Smart Alternator	<11.5V	>12V
Traditional Alternator	<12.7V	>13.2V

1. Smart Alternator: The auxiliary battery will charge the starter battery only when the voltage of the auxiliary battery is greater than 11.5V.

   The battery charger will charge the starter battery for 1min and then stop charging for 30s. During this period, the battery charger will test the voltage of the starter battery automatically.

   (1) If the voltage of the starter battery is less than 11.5V, the auxiliary battery will continue to charge the starter battery.

(2) If the voltage is greater than 12V, the auxiliary battery will stop charging the starter battery and activate the standby state.

2. Traditional Alternator: The auxiliary battery will charge the starter battery only when the voltage of the auxiliary battery is greater than 12.7V.

   The battery charger will charge the starter battery for 1min and then stop charging for 30s. During this period, the battery charger will test the voltage of the starter battery automatically.

   (1) If the voltage of the starter battery is less than 12.7V, the auxiliary battery will continue to charge the starter battery.

   (2) If the voltage is greater than 13.2V, the auxiliary battery will stop charging the starter battery and activate the standby state.

3. The maximum charging current for the battery charger to charge the starter battery should be no more than 30A.

Overvoltage protection

When the voltage of the starter battery is greater than 16V, the battery charger triggers overvoltage protection and stops operating immediately. The battery charger will not operate until the voltage of the starter battery is less than 15V.

Current limit protection

The current limit protection function protects the auxiliary battery from damage caused by high-voltage current.

When the output current of the alternator is greater than 70A, the battery charger triggers current limit protection and only 70A is available.

LED Indicators

Battery status | Fault status

Battery status

Indicator	Color	Status	Description
Battery	Green	ON	a. Auxiliary battery is fully charged b. Float charge c. Standby state
	Green	Flashing (1s interval)	The battery charger is charging the auxiliary battery
	/	OFF	No battery detected
	Blue	ON	The battery charger is charging the starter battery

Fault status

Indicator	Color	Status	Description
Fault	/	OFF	The battery charger is working properly
	Red	ON	a. Auxiliary battery short circuit b. Internal overtemperature of the battery charger
	Red	Slow Flashing	a. Auxiliary battery overvoltage b. Auxiliary battery undervoltage
	Red	Slow Flashing + Buzzer Alarm for every 1s	a. Auxiliary battery low voltage b. Auxiliary battery overtemperature

Troubleshooting

Fault	Description	Recommendations
Solid Red Fault	Auxiliary battery short circuit	1. Check if the positive and negative terminals of the life battery are connected correctly. 2. If the fault message persists, disable the battery charger and contact our customer service through renogy.com/contact-us/.
Solid Red Fault	Internal overtemperature of the battery charger	1. Check the environment around the battery charger to ensure that enough space is left for heat dissipation. 2. Refer to Mounting in this manual for the selection of the heat dissipation space.
Slow Flashing Red Fault	Auxiliary battery overvoltage	1. Check if the auxiliary battery voltage exceeds 16V. 2. Disconnect the output and wait 5s to restart the battery charger. 3. If the fault message persists, disable the battery charger and contact our customer service through renogy.com/contact-us/.
Slow Flashing Red Fault	Auxiliary battery undervoltage	1. Check if the auxiliary battery voltage is below 12V. 2. This alarm serves as a reminder to charge the auxiliary battery in time.
Slow flashing red + buzzer alarm for 1s Fault	Auxiliary battery low voltage	1. Check if the auxiliary battery voltage is below 11.1V. 2. Disconnect all loads on the auxiliary battery to charge the auxiliary battery in time.
Slow flashing red + buzzer alarm for 1s Fault	Auxiliary battery over temperature	1. Check whether the battery charger is integrated with temperature sensor. If not, it is probably the error report caused by auxiliary battery overdischarge. 2. After confirming that the temperature sensor is connected, read the temperature value of the auxiliary battery from the DC Home app to check if it exceeds 65°C. 3. Ensure that the environment where the auxiliary battery is installed leaves sufficient space for heat dissipation. 4. Make the battery charger stop operating and contact the supplier of the battery immediately.

Technical Specifications

Parameter	Value
Model	RBC1260DO-12B
System Voltage	12V
Input Voltage	10V to 16V DC
Output Voltage	10V to 16V DC
Alternator Input	Traditional Alternator: 13.5V to 16VDC Smart Alternator (Euro 6): 12.5V to 16VDC
Maximum Output Current Rating	60A
Output Power	800W
Battery Types	SLD/AGM; GEL; Flooded; LI; USER
Input Fuse Rating	90A
Output Fuse Rating	80A
Charging Efficiency	≥94%
Temperature Compensation	Non-Lithium: -3mV / °C / 2V Lithium: 0mV / °C / 2V; no compensation
Idle Power Consumption	≤50 mA
Operating Temperature Range	-20°C to 60°C / -4°F to 140°F
Storage Temperature Range	-35°C to 65°C / -31°F to 149°F
Humidity	0%-95%, No Condensation
Communication Protocol	Modebus; RV-C
Dimensions	13.78 x 8.39 x 4.02 in / 350 x 213 x 102 mm
Weight	7 lbs / 3.12kg
Terminal Size/Type	Anderson PP75
Terminal Range	6AWG to 8AWG
Certification	CB; FCC; CE; UKCA; MIC
Warranty	5 Years

Dimensions

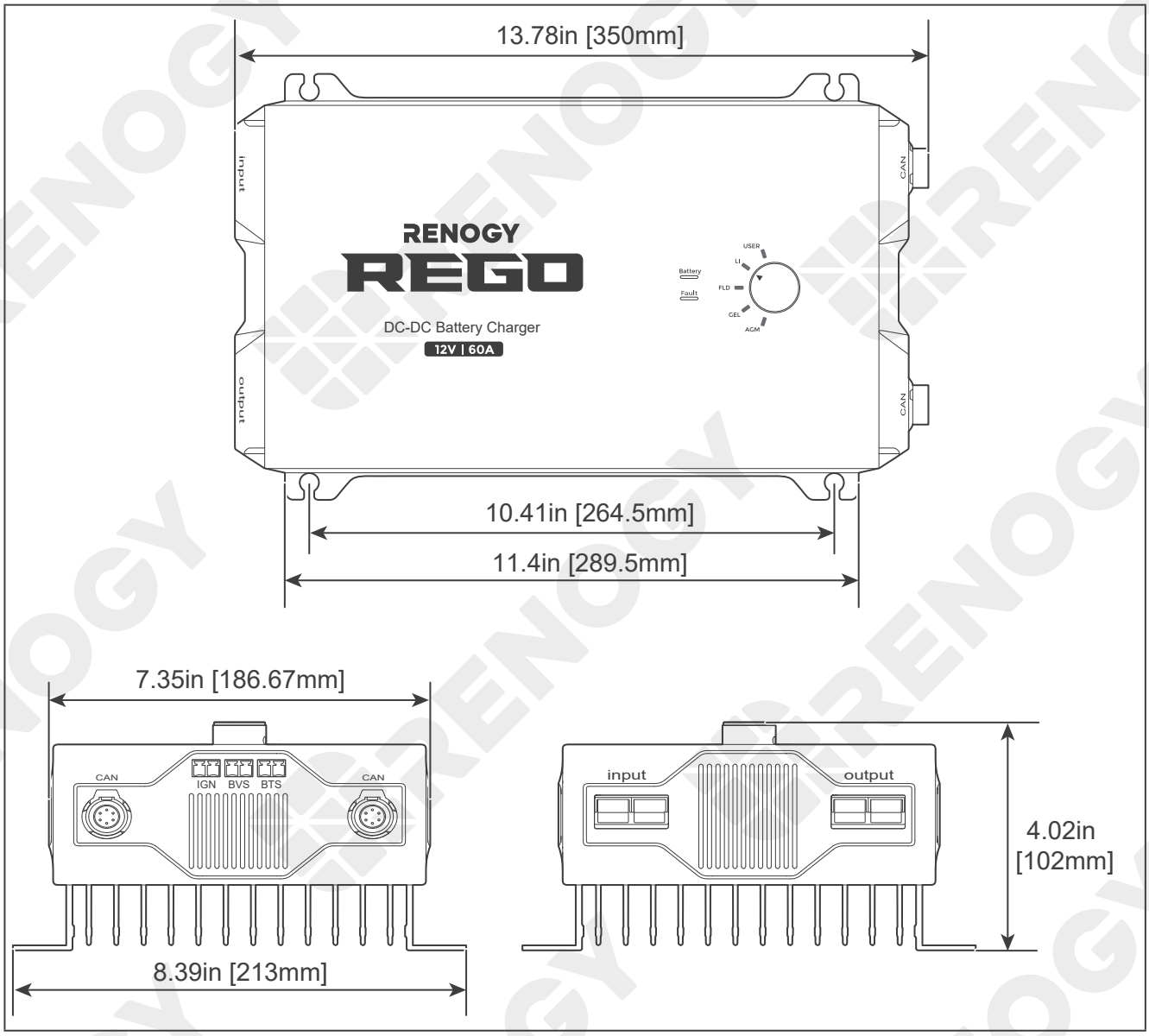

NOTE

- Dimension tolerance: ±0.2 in (0.5 mm)

Inspection

For optimum performance, it is recommended to perform these tasks regularly.

- Ensure the battery charger is installed in a clean, dry, and ventilated area.
- Ensure there is no damage or wear on the cables.
- Ensure the firmness of the Anderson connectors and check if there are any loose, damaged or burnt connections.
- Ensure that the Battery indicator and Fault indicator are in normal state.
- Ensure there is no corrosion, insulation damage, or discoloration marks of overheating or burning.

NOTE

- In some applications, corrosion may exist around the contacts inside the Anderson connector.
  Corrosion can loosen springs and increase resistance, leading to premature connection failure. Apply dielectric grease to each connector contact periodically. Dielectric grease repels moisture and protects the connector contacts from corrosion.

WARNING

- Risk of electric shock! Make sure that all power is turned off before touching the terminals on the battery charger.

Cleaning

Follow the steps below to clean the battery charger regularly.

- Disconnect all Anderson connectors that are connected to the battery charger.
- Wipe the housing of the battery charger and connector contacts with a dry cloth or non-metallic brush.
- Dry the battery charger with a clean cloth and keep the area around the battery charger clean and dry.
- Make sure the battery charger is completely dry before reconnecting the Anderson connector to the battery charger.
- When reconnecting, the auxiliary battery must be connected first, then the starter battery.

Storage

Follow the tips below to ensure that the battery charger is stored well.

- Disconnect all Anderson connectors that are connected to the battery charger.
- By applying dielectric grease to each connector contact, the dielectric grease repels moisture and protects the connector contacts from corrosion.

Emergency Responses

Fire | Flooding | Smell | Noise

In the event of any threat to health or safety, always begin with the steps below before addressing other suggestions.

- Immediately contact the fire department or other relevant emergency response team.
- Notify all people who might be affected and ensure that they can evacuate the area.

WARNING

- Only perform the suggested actions below if it is safe to do so.

Fire

1. Disconnect all cables connected to the battery charger.
2. Put out the fire with a fire extinguisher. Acceptable fire extinguishers include water, CO_2, and ABC.

WARNING

- Do not use type D (flammable metal) fire extinguishers.

Flooding

1. If the battery charger is submerged in water, stay away from the water.
2. Disconnect all cables connected to the battery charger.

Smell

1. Disconnect all cables connected to the battery charger.
2. Make sure nothing is in contact with the battery charger.
3. Ventilate the room.

Noise

1. Disconnect all cables connected to the battery charger.
2. Make sure no foreign objects are stuck in the controller Anderson connector.

NOTE

- The normal noise value of the battery charger is less than or equal to 60dB during operation.

Technical Support

For additional support, contact the Renogy technical support team through renogy.com/contact-us. Have the following information available when contacting Renogy.

- Owner name
- Contact information
- Order number
- Purchase channel
- Serial number
- Brief description of the issue

Renogy offers premium services worldwide:

North America	US	www.renogy.com	CN	www.renogy.cn
Asia/Pacific	UK	uk.renogy.com	CA	ca.renogy.com
	AU	au.renogy.com	JP	renogy.jp
Europe	FR	fr.renogy.com	DE	de.renogy.com
	ES	es.renogy.com	KR	kr.renogy.com

FCC Statement

This device complies with Part 15 of the FCC Rules. FCC ID: 2ANPBRSMLP4-G2. Operation is subject to the following two conditions:

(1) This device may not cause harmful interference.

(2) This device must accept any interference received, including interference that may cause undesired operation.

This equipment has been tested and found to comply with the limits for a Class B digital device, pursuant to Part 15 of the FCC Rules. These limits are designed to provide reasonable protection against harmful interference in a residential installation. This equipment generates, uses and can radiate radio frequency energy and, if not installed and used in accordance with the instructions, may cause harmful interference to radio communications. However, there is no guarantee that interference will not occur in a particular installation. If this equipment does cause harmful interference to radio or television reception, which can be determined by turning the equipment off and on, the user is encouraged to try to correct the interference by one or more of the following measures:

(1) Orient or relocate the receiving antenna.

(2) Increase the separation between the equipment and receiver.

(3) Connect the equipment into an outlet on a circuit different from that to which the receiver is connected.

(4) Consult the dealer or an experienced radio/TV technician for help.

FCC Radiation Exposure Statement

This equipment complies with FCC radiation exposure limits set forth for an uncontrolled environment. This equipment should be installed and operated with minimum distance 20cm between the radiator & your body.

Visit renogy.com to find relevant documentation or get more support via "Contact Us".
Renogy reserves the right to change the contents of this manual without notice.

Manufacturer: RENOGY New Energy Co.,Ltd
Address: No.66, East Ningbo Road Room 624-625
Taicang German Overseas Students Pioneer Park
JiangSu 215000 CN

EC REP
eVatmaster Consulting GmbH
Battinastr.30
60325 Frankfurt am Main, Germany
contact@ evatmaster. com

Manufacturer: RENOGY New Energy Co.,Ltd
Address: No.66, East Ningbo Road Room 624-625
Taicang German Overseas Students Pioneer Park
JiangSu 215000 CN

UK REP
EVATOST CONSULTING LTD
Suite 11, First Floor, Moy Road Business
Centre, Taffs Well, Cardiff, Wales, CF15 7QR
contact@evatmaster.com

Join the Renogy Power Plus Community
by downloading the DC Home App.
Find your e-warranty here, and more.