RENOGY Pro Series

Underseat Lithium Iron Phosphate Battery

12.8V | 200Ah

RBT12200LFP-SHBT-G1

VERSION A1
April 15, 2025

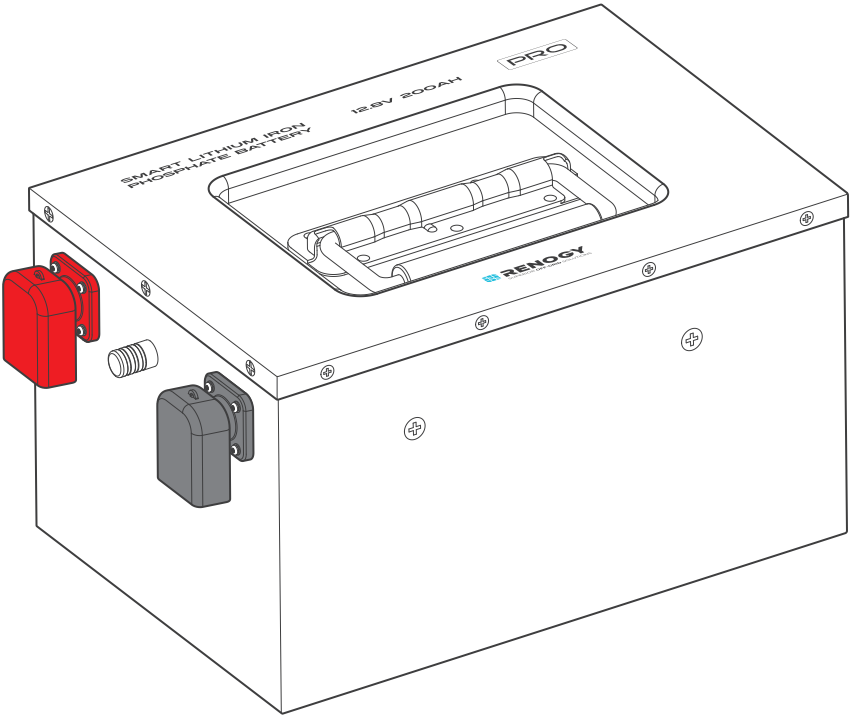

USER MANUAL

Before Getting Started

The user manual provides important operation and maintenance instructions for RENOGY Pro Series 12.8V 200Ah Underseat Lithium Iron Phosphate Battery (hereinafter referred to as battery).

Read the user manual carefully before operation and save it for future reference. Failure to observe the instructions or precautions in the user manual can result in electrical shock, serious injury, or death, or can damage the battery, potentially rendering it inoperable.

- Renogy ensures the accuracy, sufficiency, and the applicability of information in the user manual at the time of printing due to continual product improvements that may occur.
- Renogy assumes no responsibility or liability for personal and property losses, whether directly and indirectly, caused by the user's failure to install and use the product in compliance with the user manual.
- Renogy is not responsible or liable for any failure, damage, or injury resulting from repair attempts by unqualified personnel, improper installation, or inappropriate operation.
- The illustrations in the user manual are for demonstration purposes only. Details may appear slightly different depending on product revision and market region.
- Renogy reserves the right to change the information in the user manual without notice. For the latest user manual, visit renogy.com.

Disclaimer

RENOGY Pro Series 12.8V 200Ah Underseat Lithium Iron Phosphate Battery User Manual © 2025 Renogy. All rights reserved.

RENOGY and RENOGY are registered trademarks of Renogy.

- All information in the user manual is subject to copyright and other intellectual property rights of Renogy and its licensors. The user manual may not be modified, reproduced, or copied, in whole or in part, without the prior written permissions of Renogy and its licensors.
- The registered trademarks in the user manual are the property of Renogy. The unauthorized use of the trademarks is strictly prohibited.

Renogy App

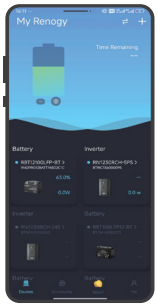

Renogy App

GTE IT ON Google Play

Download on the App Store

Table of Contents

Symbols Used 1

Introduction 1

Key Features 1

SKU 1

What's In the Box? 2

Required Tools & Accessories 2

Get to Know Underseat Lithium Iron Phosphate Battery 3

Dimensions 3

How to Size Battery Adapter Cables? 4

Fix the Battery to a Position (Optional) 4

Step 1. Plan a Mounting Site 5

Step 2. Wear Insulating Gloves 6

Step 3. Check the Battery 6

Step 4. Install Battery Terminals 6

Step 5. Install the Insulation Sleeves 7

Step 6. Connect the Battery to Power Supply Devices 7

How to Connect Batteries in Series or Parallel 8

- Calculate Voltage and Current in Series and Parallel Connections 8
- Balance Batteries Prior to Connection 9
- Series Connection vs. Parallel Connection — Installation Steps 10
- Battery Cell Balancing 12

Remote, 24/7 Monitoring 12

- Short-Range Monitoring via Renogy App 12
- Wireless Long-Range Monitoring 13

Charging/Discharging Parameter Settings 14

Battery Charging and Discharging Logic 14

- Charging Logic 14
- Discharging Logic 15

How to Estimate the Battery SOC? 15

Self-Heating Function 15

Battery Management System 16

Troubleshooting 17

Specifications **18**
General 18
Operation Parameters 18
Maintenance & Storage **19**
Inspection 19
Cleaning 19
Checking Voltage 19
Storage 19
Important Safety Instructions **20**
General 20
Battery Safety 20
Renogy Support **21**
Battery Recycling **22**

Symbols Used

The following symbols are used throughout the user manual to highlight important information.

WARNING: Indicates a potentially hazardous condition that could result in personal injury or death.

CAUTION: Indicates a critical procedure for safe and proper installation and operation.

NOTE: Indicates an important step or tip for optimal performance.

Introduction

The RENOGY Pro Series 12.8V 200Ah Underseat Lithium Iron Phosphate Battery adopts a proprietary battery housing material in a smaller size for your RVs, solar setups, trolling motors, wind and marine applications, camping, off-grid systems, and more.

Weighing only half of the lead-acid counterparts, the battery can be safely discharged to 100% Depth of Discharge (DOD), delivering twice the energy. Manufactured with automotive grade battery cells, the battery features the highest safety standards and an extended 4000+ cycle life. In addition, the smart Battery Management System (BMS) provides comprehensive protection to the battery.

Key Features

- **Unparalleled Performance**
  Features a greater energy density, a deeper discharge capability, a higher round-trip efficiency, and a faster charging speed in a smaller size over counterparts in the market.
- **Uncompromising Quality**
  Ensures an exceptional lifespan with more than 4000+ cycles (80% DOD), a continuous charge or discharge current of 200A, and a wide range of operating temperatures with the automotive grade battery cells.
- **Reliable Protection Mechanisms**
  Designed with a sturdy internal structure for RV use, and includes more than 60 protections and alarms through the smart battery management system.
- **Real-time Monitoring**
  You can easily get the battery information through the Renogy app (free of charge) and Renogy ONE Core (sold separately) at any time.
- **Intelligent Self-Heating Function & More Stable Performance**
  The built-in heater operates automatically at low temperatures to keep the battery charging, assuring charging performance at low temperature and increasing battery lifespan.
- **Best-in-Class Capacity and Easy Expansion**
  Up to 16 batteries in 4 series and 4 parallels system connection delivering a maximum of 48V (51.2V) 800Ah with 40.96 kWh.
- **Tailored For the Space Under the RV Seats**
  Tailored for compatibility with caravan's and motorhome's chassis and under-seat installations.

SKU

RENOGY Pro Series 12.8V 200Ah Underseat Lithium Iron Phosphate Battery	RBT12200LFP-SHBT-G1

What's In the Box?

RENOGY Pro Series 12.8V 200Ah
Underseat Lithium Iron Phosphate Battery × 1

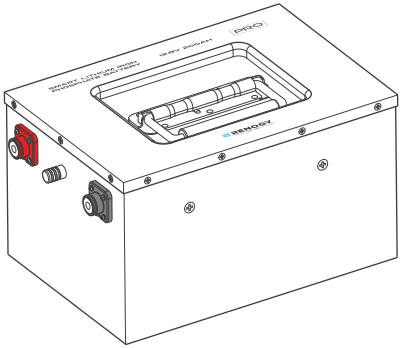

User Manual × 1

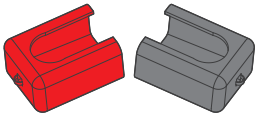

Insulation Sleeves × 2

M8*1.25*16 mm

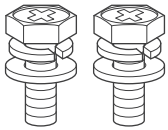

Long Terminal Bolt × 2

Make sure that all accessories are complete and free of any signs of damage.

Required Tools & Accessories

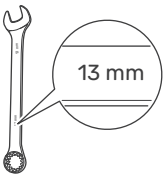

Wrench (17/32 in)

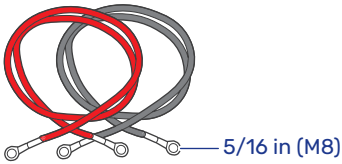

Battery Adapter Cables × 2

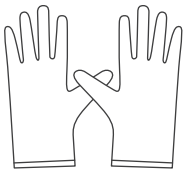

Insulating Gloves

Multimeter

Prior to installing and configuring the battery, prepare the recommended tools, components, and accessories.

For how to size battery adapter cables, refer to "How to Size Battery Adapter Cables?" in this manual.

Get to Know Underseat Lithium Iron Phosphate Battery

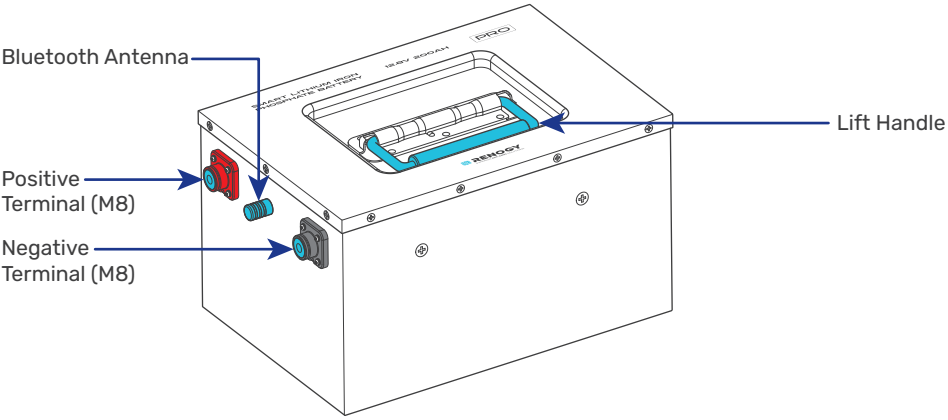

Dimensions

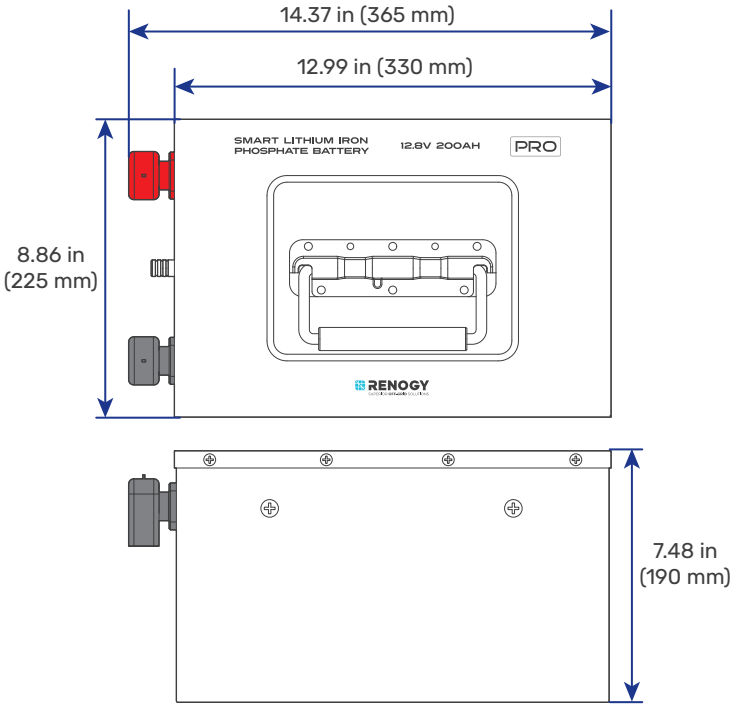

Weight 50.71 lbs (23.0 kg)

Dimension tolerance: ±0.2 in (0.5 mm)

How to Size Battery Adapter Cables?

Use appropriately sized Battery Adapter Cables (sold separately) based on expected loads. Refer to the table below for copper cable ampacities with different gauge sizes for up to 13 feet (4 m) cables. Cables longer than 13 feet (4 m) may require thicker gauge wires to prevent excessive voltage drop in undersized wiring.

Cable Gauge Size	Ampacity	Cable Gauge Size	Ampacity
14 AWG (2.08 mm²)	25A	1 AWG (42.41 mm²)	145A
12 AWG (3.33 mm²)	30A	1/0 AWG (53.49 mm²)	170A
10 AWG (5.26 mm²)	40A	2/0 AWG (67.43 mm²)	195A
8 AWG (8.37 mm²)	55A	3/0 AWG (85.01 mm²)	225A
6 AWG (13.3 mm²)	75A	4/0 AWG (107.22 mm²)	260A
4 AWG (21.15 mm²)	95A	300 kcmil (152.1 mm²)	320A
3 AWG (26.67 mm²)	115A	400 kcmil (202.8 mm²)	380A
2 AWG (33.62 mm²)	130A	500 kcmil (253.5 mm²)	430A

The above values are from the NEC Table 310.16 for copper cables rated at 194°F (90°C), operating at an ambient temperature of no more than 86°F (30°C). Please note that wire gauge standards may vary due to factors such as temperature and installation conditions. In actual applications, it is recommended to refer to the latest NEC standards.

Fix the Battery to a Position (Optional)

Securing the battery prevents damage to the battery from loose cables and bumps. You can purchase the following accessories and components on demand.

Recommended Components

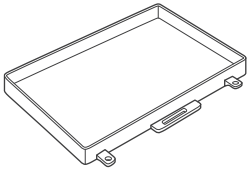

Battery Tray

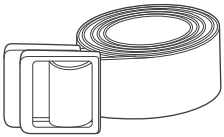

Tie Down Strap

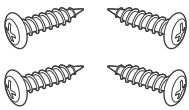

Mounting Screws

Alternative mounting methods are allowed to meet the requirements of specific applications.

We recommend installing the battery on the bottom. However, you can also mount it on all sides of the battery except the top side that has two terminals.

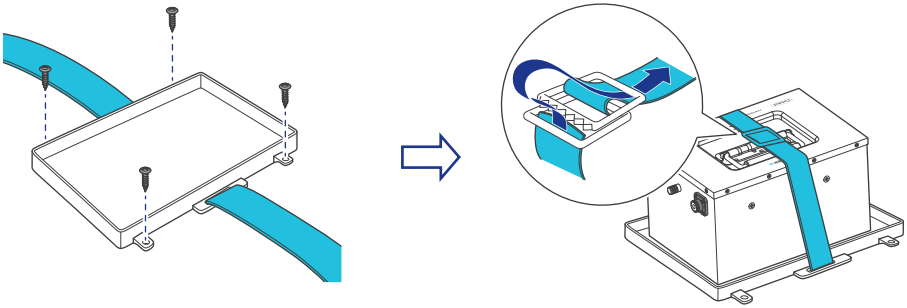

Step 1. Plan a Mounting Site

For optimal battery performance, it is recommended to install the battery in a clean, cool, and dry location, free from any accumulation of water, oil, or dirt. Accumulation of such materials on the battery can lead to current leakage, self-discharge, and even short-circuiting.

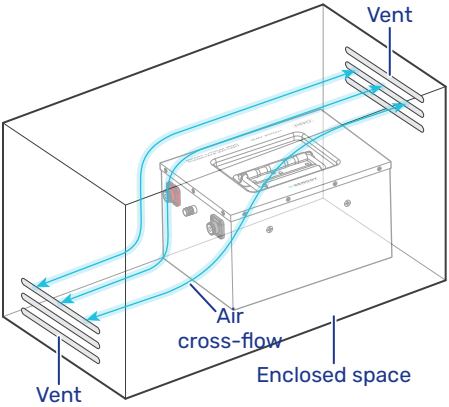

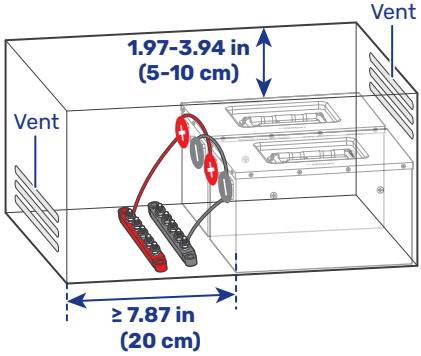

Charge: -4°F to 131°F / -20°C to 55°C
*< 32°F/0°C: The self-heating function is on.
Discharge: -4°F to 122°F / -20°C to 50°C

10% to 95%

Sufficient airflow must be provided to prevent excessive heat build-up and to minimize temperature variation between the connected batteries.

This user manual takes a battery as an example to illustrate how to install the battery. Similar rules apply to scenarios involving multiple batteries.

Step 2. Wear Insulating Gloves

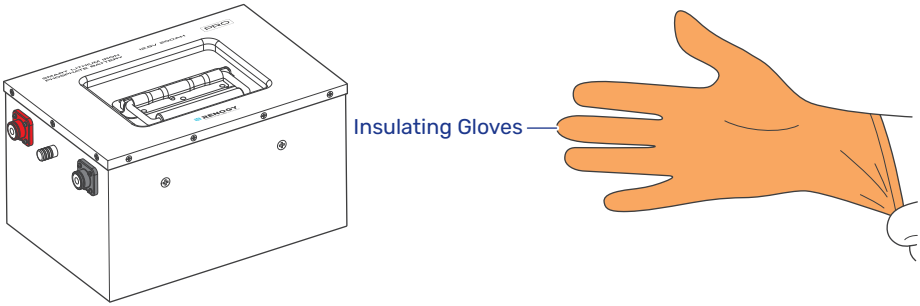

Step 3. Check the Battery

Inspect the battery for any visible damage including cracks, dents, deformation, and other visible abnormalities. All connector contacts shall be clean, free of dirt and corrosion, and dry.

- Do not touch the exposed electrolytes or powder if the battery is damaged.
- If any uncovered electrolyte or powder comes into contact with your skin or eyes, flush the area immediately with plenty of clean water and seek medical attention.

Step 4. Install Battery Terminals

Install battery adapter cables on the battery via the included long terminal bolts (M8*1.25*16 mm).

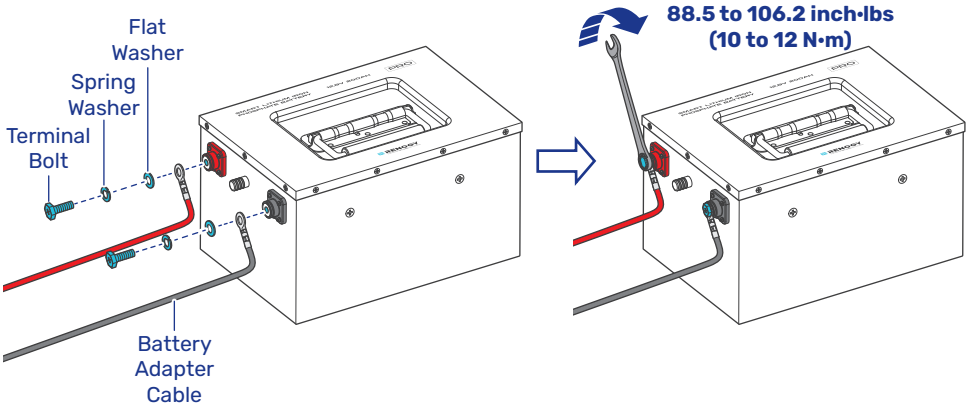

- Ensure the cable lug and the top surface of the terminal are in contact, and place the washers on top of the lug. Do not place a washer between a battery terminal and a cable lug to avoid high resistance and excessive heating.
- Avoid short-circuiting the battery terminals to prevent irreversible damage to the system and battery caused by current bursts.
- Verify polarity before wiring to avoid irreversible battery damage due to polarity reversal.
- Do not touch the positive and negative terminals of the battery with your hands.

To ensure safe and reliable operation of the system, please follow the torque specifications recommended by the manufacturer when securing cable connections. Over-tightening can result in terminal breakage, while loose connections can lead to terminal meltdown or fire. When securing multiple cable lugs on a single battery terminal, use the included Long Terminal Bolts.

Step 5. Install the Insulation Sleeves

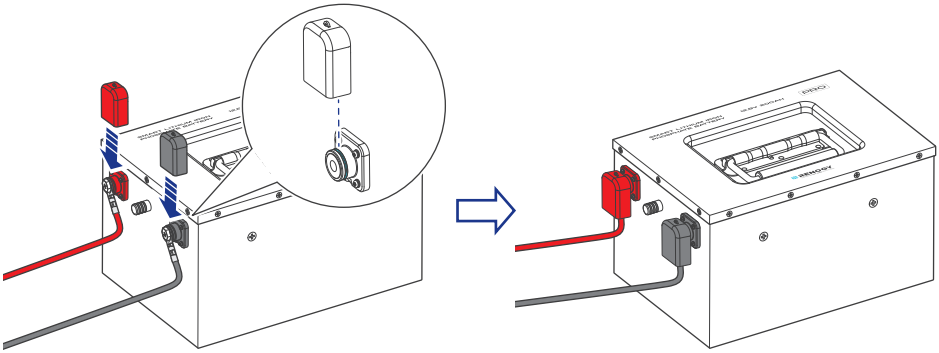

Step 6. Connect the Battery to Power Supply Devices

You can connect the battery to a distribution panel or power supply devices such as an inverter, a DC-DC battery charger, and a charge controller.

Please use circuit breakers, fuses, or disconnects appropriately sized by a certified electrician, licensed installers, or regional code authorities to protect all electrical equipment.

For details about series and parallel battery connections, refer to "How to Connect Batteries in Series or Parallel" in this manual.

For a Single Battery

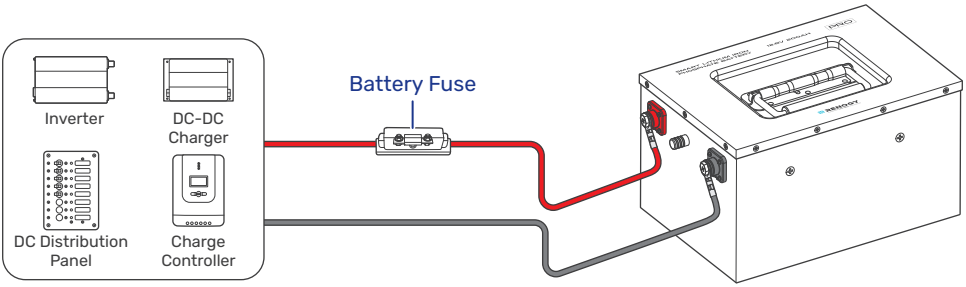

For Batteries in Parallel

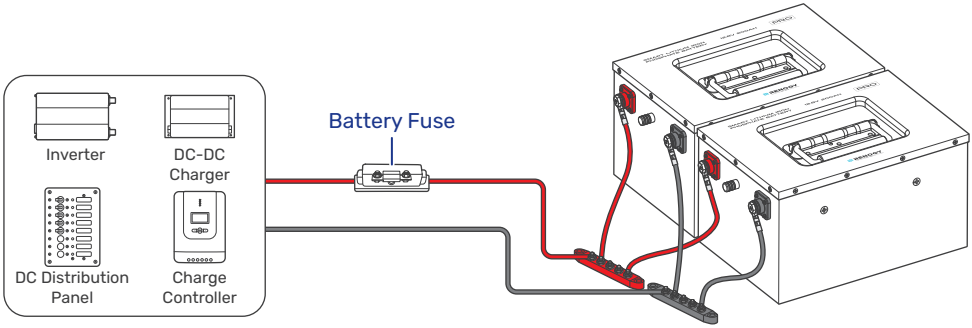

For Batteries in Series

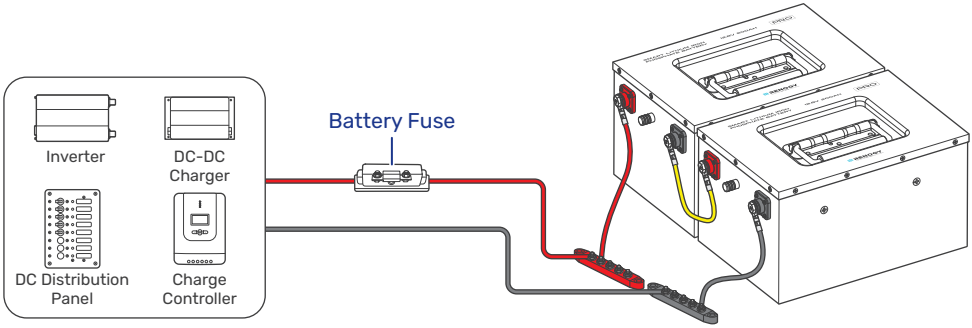

How to Connect Batteries in Series or Parallel

Calculate Voltage and Current in Series and Parallel Connections

The cables between each connected battery should be of equal length to ensure that all batteries can work equally together. You can connect up to 8 batteries in parallel or 4 batteries in series.

Parallel Connection
12V(12.8V) 800Ah

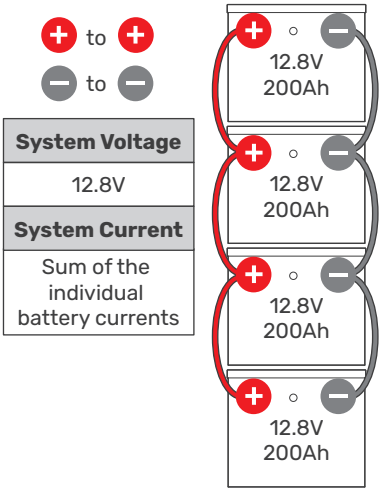

System Voltage
12.8V
System Current
Sum of the individual battery currents

Series Connection
48V(51.2V) 200Ah

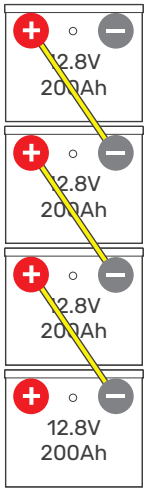

+ to −

System Voltage
Sum of the individual battery voltages
System Current
200A

Long terminal bolts (M8 * 1.25 * 16 mm) should be used to secure the battery adapter cables. The recommended torque is 88.5 inch•lbs to 106.2 inch•lbs (10 N•m to 12 N•m).

Do not connect batteries with different chemistries, rated capacities, nominal voltages, brands, or models in parallel or in series. This can result in potential damage to the batteries and the connected devices, and can also pose safety risks.

Avoid connecting batteries that have been purchased for more than half a year. Over time, batteries can degrade and their performance may decrease, which can affect their ability to deliver reliable power and may lead to safety hazards.

Balance Batteries Prior to Connection

Before connecting batteries in series or parallel, it is important to balance them to reduce voltage differences and optimize their performance. Follow these three steps:

Step 1: Charge each battery individually to its full capacity using a suitable charger.

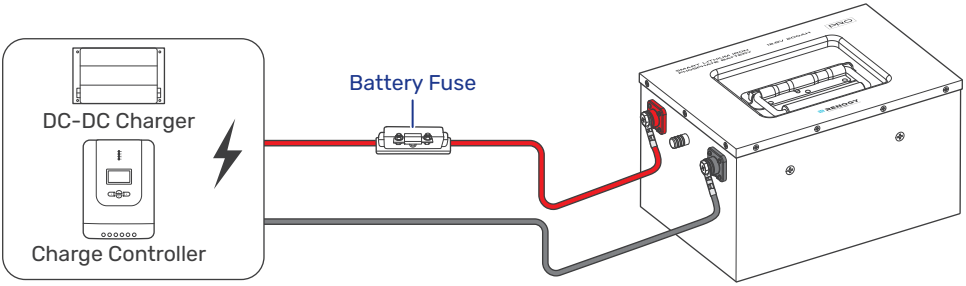

Step 2: Use a voltmeter to measure the voltage of each battery. It is best to keep the voltage difference of each battery less than 0.1V.

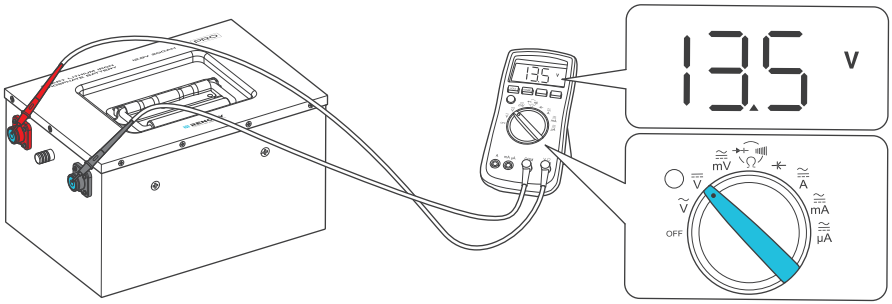

Step 3: Connect all the batteries in parallel and allow them to rest together for 12 to 24 hours before use.

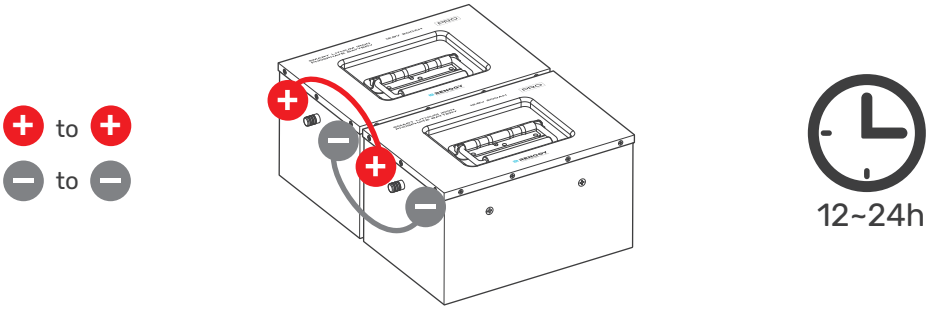

It is recommended to periodically rebalance the battery voltages every six months when connecting multiple batteries as a battery system. Slight voltage differences can occur among batteries over time due to factors like battery chemistry, capacity, temperature, and usage patterns.

Series Connection vs. Parallel Connection – Installation Steps

You can choose suitable busbars in series and parallel connections. Busbars help handle high currents and are typically arranged in a parallel or stacked configuration to distribute electrical power efficiently.

Note that the cable connection methods provided below are for reference purposes only, as the optimal approach may vary depending on the specific situation. It is essential to consider various factors, such as the cable size, equipment used, and environmental conditions.

Parallel Connection

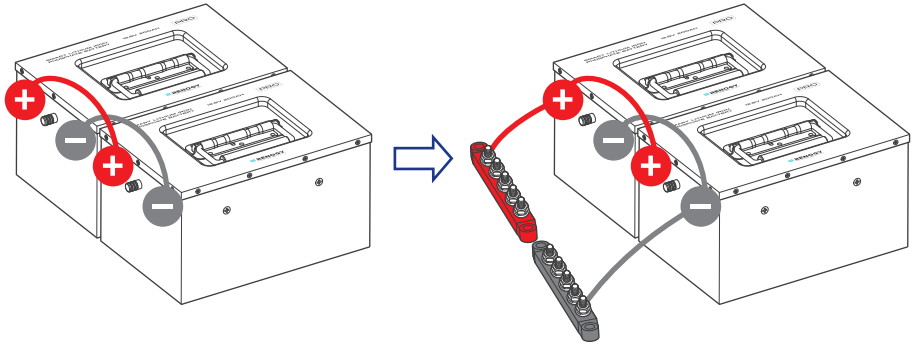

2P	Battery System	12V (12.8V) 400Ah
	Energy	5120Wh
8P (Max)	Battery System	12V (12.8V) 1600Ah
	Energy	20480Wh

Series Connection

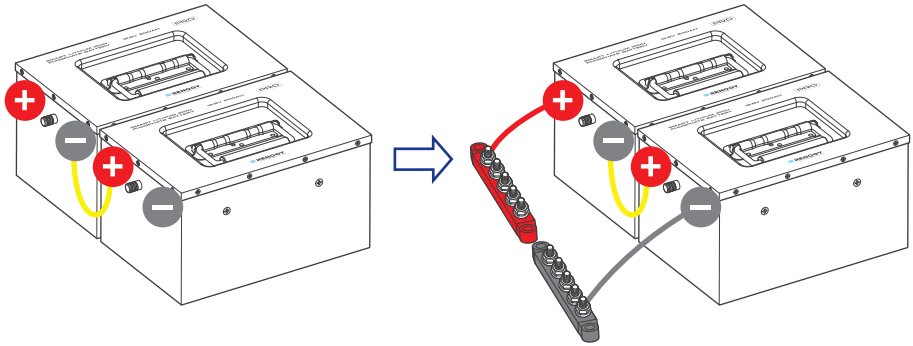

2S	Battery System	24V (25.6V) 200Ah
	Energy	5120Wh
4S (Max)	Battery System	48V (51.2V) 200Ah
	Energy	10240Wh

Parallel & Series Connection

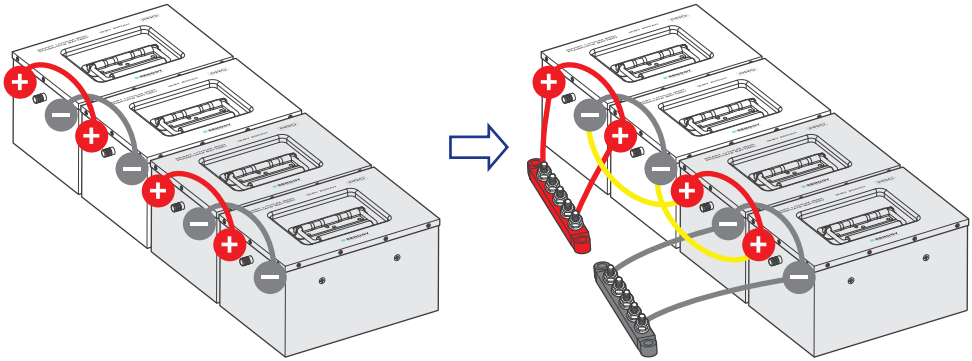

2P2S	Battery System	24V (25.6V) 400Ah
	Energy	10240Wh
2P4S	Battery System	48V (51.2V) 400Ah
	Energy	20480Wh

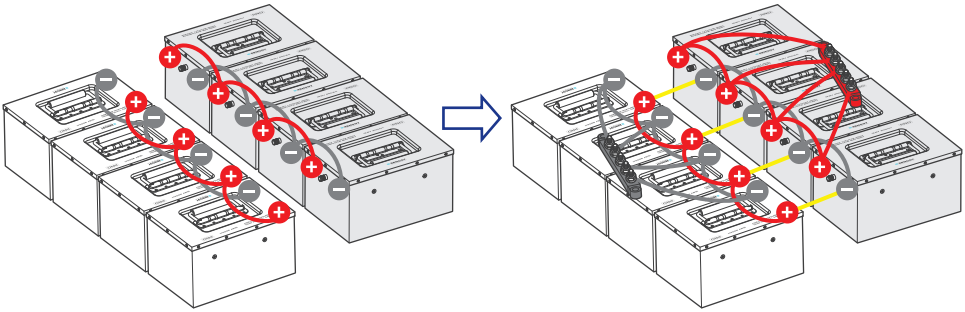

4P2S	Battery System	24V (25.6V) 800Ah
	Energy	20480Wh
4P4S (Max)	Battery System	48V (51.2V) 800Ah
	Energy	40960Wh

Battery Cell Balancing

The battery employs bypass circuit to maintain the balance between each battery cell group. Each battery cell group is connected with a bypass resistor and a switch in parallel. During the charging process, if the highest-voltage battery cell group reaches the set balancing starting voltage and the voltage difference between the highest-voltage and the lowest-voltage battery cell group exceeds the set voltage difference, the switch connected to the highest-voltage battery cell group will be closed to shunt the charge current around the highest-voltage battery cell group through the bypass resistor until the voltage difference drops below the set value. To avoid excessive energy loss, the battery cell balancing is only performed during the charging process.

Remote, 24/7 Monitoring

Depending on the specific application, the battery can establish either short-range or long-range communication connections with monitoring devices. These monitoring devices facilitate real-time monitoring, programming, and complete system management, offering comprehensive control and enhanced flexibility.

You can monitor the performance of the battery through either or both of the following methods: Renogy app (free of charge) Renogy ONE Core (sold separately).

- Ensure the Bluetooth of your phone is turned on.
- The version of the Renogy app might have been updated. Illustrations in the user manual are for reference only. Follow the instructions based on the current app version.
- To ensure optimal system performance, keep the phone within 10 feet (3 m) of the battery.

To ensure the optimal device compatibility, download and log into the latest Renogy app.

Renogy App

GTE IT ON
Google Play

Download on the
App Store

Short-Range Monitoring via Renogy App

Pair the battery with the Renogy app. Monitor the battery parameters via the app.

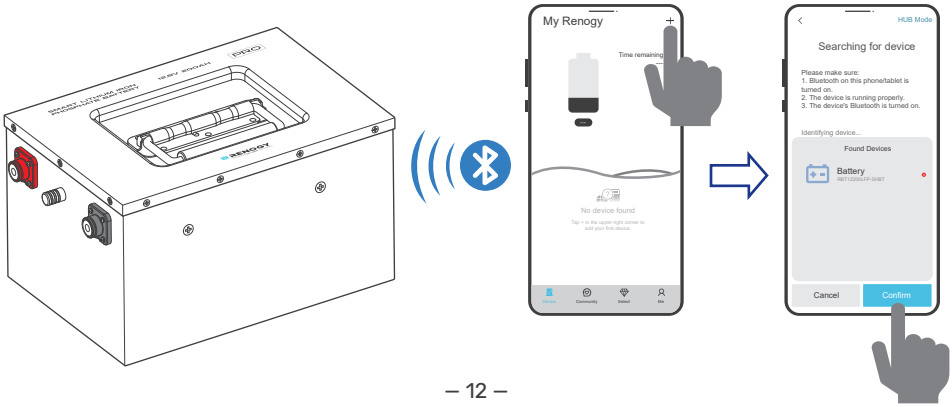

Wireless Long-Range Monitoring

If long-range communication and programming are required, connect the battery to Renogy ONE Core (sold separately) through Bluetooth, and then pair Renogy ONE Core with the Renogy app.

Recommended Components

*RENOGY ONE Core

- Components marked with "*" are available on renogy.com.
- Ensure that the Renogy ONE Core is powered on before the connection.
- For instructions on Renogy ONE Core, see Renogy ONE Core User Manual.
- Ensure the battery does not communicate with any other device.

Step 1: Connect the battery to Renogy ONE Core through the Bluetooth of your phone.

Step 2: Pair the Renogy ONE Core with the Renogy app through Wi-Fi or by scanning the QR code in Renogy ONE Core. On Renogy ONE Core, go to "System > Settings > Pair with App" to get the QR code. For pairing instructions on Renogy ONE Core, see Renogy ONE Core User Manual.

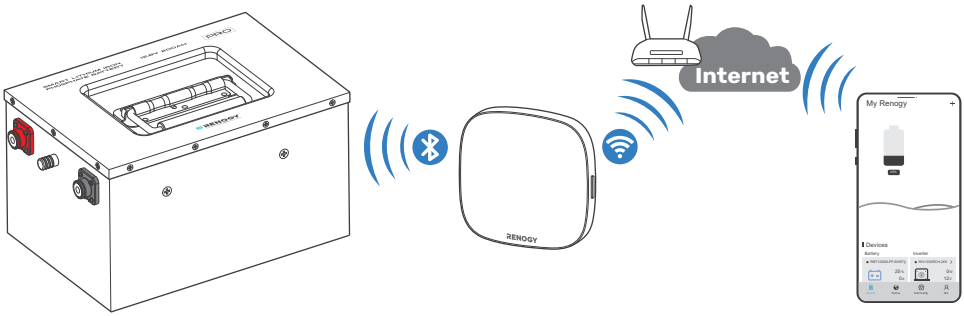

Charging/Discharging Parameter Settings

It is recommended that a single 12.8V 200Ah battery should be charged at 100A with a maximum allowable charging current at 200A. For single-battery scenarios, we recommend using 12V charge controllers rated at least 100A. For added safety and flexibility, a 12V 150A or 200A charge controller or battery charger is an ideal choice. For scenarios containing multiple batteries connected in series or parallel, consider the total voltage and capacity.

Charge (for Charge Controller & Battery Charger)

Charge/Boost Voltage	14.4V	**Overvoltage Disconnect**	15.0V
Bulk/Absorption Voltage	14.4V / Disabled	**Overvoltage Reconnect**	14.2V
Boost Return Voltage	13.2V		

Discharge (for Inverter)

Low Voltage Reconnect	12.6V	**Undervoltage Warning**	11.2V
Undervoltage Shutdown	10.0V		

The parameters in the table are applicable to 12V (12.8V) battery packs. For 24V (25.6V) packs, multiply the values by 2, and for 48V (51.2V) packs, multiply by 4.

Battery Charging and Discharging Logic

The battery may be received at a partial state of charge (SOC) depending on the time between manufacturing and shipping. It is crucial to fully charge the battery before its initial use. In case the battery shuts off due to low SOC, promptly disconnect it from loads and charge it to prevent irreversible damage. Follow the instructions in this user manual for proper charging and usage to ensure optimal battery performance and longevity.

Charging Logic

The standard charging process for the battery involves charging at a constant current of 100A until the battery voltage reaches 14.4V, followed by charging at a constant voltage of 14.4V while tapering the charge current. The charging process is considered complete when the charge current is less than 10A (also known as tail current).

The standard charging process typically takes 2.5 hours and requires battery temperatures to be between 32°F and 131°F (0°C and 55°C) for safe charging. Leaving the battery on float will continue to balance the battery cells without damaging the battery.

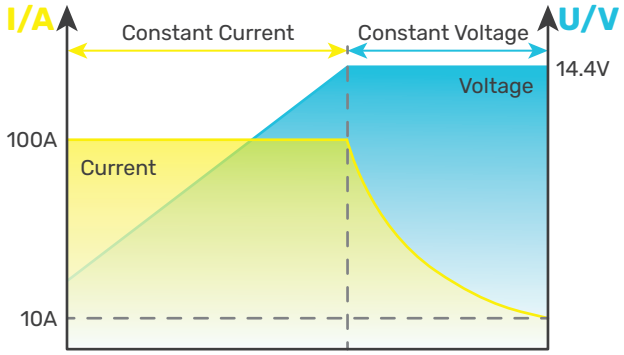

- Lithium batteries are compatible with various charging methods, including MPPT charge controller, AC charger, and DC-DC charger. The crucial parameter setting for these chargers is to set the charge voltage, boost voltage, or bulk voltage at 14.4V (±0.2V).
- Do not overcharge or overdischarge the battery.
- Do not charge the battery at high temperatures above 131°F (55°C).
- Only charge the battery with a battery charger or charge controller that is compatible with lithium iron phosphate batteries.
- Do not exceed the maximum continuous charge current (200A) of the battery.

Discharging Logic

During standard discharging, the battery is discharged at a constant current of 200A until the voltage drops to 10V. To ensure safe discharging, the battery temperature should be between -4°F (-20°C) and 122°F (50°C).

- To ensure safe and optimal battery usage, it is recommended to pair the battery with discharge equipment that features a low voltage disconnect (LVD) function.
- Do not connect large loads to the battery when it is running low.
- Do not exceed the maximum continuous discharge current (200A) of the battery.

How to Estimate the Battery SOC?

The SOC values listed below are estimated based on the resting voltage (open-circuit voltage at rest) when the battery is at rest for 30 minutes, not in charging or discharging state.

SOC	Open Circuit Voltage	SOC	Open Circuit Voltage
100%	13.6V	30%	12.9V
99%	13.4V	20%	12.8V
90%	13.2V	14%	12.7V
70%	13.1V	9%	12.6V
40%	13.0V	0%	10.0V

- The table above is for reference only because slight variations in battery voltage may occur among different batteries.

Self-Heating Function

The normal operation of the self-heating function requires a stable charge current greater than 10A for each battery in the parallel battery bank. The self-heating function will start operating automatically once the battery and the battery temperature drops below 32°F (0°C) and stop operating automatically once the battery temperature rises above 50°F (10°C). The temperature rise rate is approximately 68°F (20°C) per 70 minutes when running at full power of 100W.

Battery Management System

This smart battery management system has more than 60 fault alarms and protections to fully protect your battery safety. Below we list some common faults and protections for reference.

Battery Operating Status		Condition (For Reference Only)	
Battery Cell Overvoltage	Protection	Trigger	Battery Cell Voltage ≥ 3.7V
		Recover	Battery Cell Voltage ≤ 3.55V
Battery Cell Undervoltage	Protection	Trigger	Battery Cell Voltage ≤ 2.5V
		Recover	Battery Cell Voltage ≥ 2.8V
Charge High Temperature	Protection	Trigger	Battery Temperature ≥ 140°F (60°C)
		Recover	Battery Temperature ≤ 122°F (50°C)
Discharge High Temperature	Protection	Trigger	Battery Temperature ≥ 149°F (65°C)
		Recover	Battery Temperature ≤ 131°F (55°C)
Charge Low Temperature	Protection	Trigger	Battery Temperature ≤ 32°F (0°C)
		Recover	Battery Temperature ≥ 41°F (5°C)
Discharge Low Temperature	Protection	Trigger	Battery Temperature ≤ -4°F (-20°C)
		Recover	Battery Temperature ≥ 1.4°F (-17°C)
Charge Overcurrent	Protection	Trigger	Charge Current ≥ 210A (5s)
		Recover	Battery discharging or Recover automatically after 60s
Discharge Overcurrent	Primary Protection	Trigger	Discharge Current ≥ 220A (3s)
		Recover	Battery charging or Recover automatically after 60s The battery discharge function locks after three activations of the primary protection mechanism. The discharge lock is automatically released when normal charging is initiated.
	Secondary Protection	Trigger	Discharge Current ≥ 400A (200ms to 2000ms)
		Recover	Battery charging or Recover automatically after 60s
Short Circuit	Protection	Trigger	Discharge Current ≥ 1000A
		Recover	Battery charging or Remove the load

Troubleshooting

Problem	Possible Causes	Solution
• The battery is unable to be activated with a charge/discharge current greater than 1A • The battery is activated at open circuit voltage below 10V	Severe battery overdischarge due to self-discharge or parasitic loads	Revive the battery with a battery charger or charge controller featuring lithium battery activation or force charging.
The battery shuts off due to undervoltage protection.	The battery voltage drops below the preset threshold	Disconnect the battery from loads, and charge the battery with a current greater than 1A as soon as possible.
The battery cuts off the charging current due to overvoltage protection	The battery voltage exceeds the preset threshold during charging.	1. Disconnect the battery from the charging source. 2. Reduce charge voltage by 0.2V to 0.4V for 6 hours. 3. Attempt to fully charge the battery again with the correct voltage setting. If the problem persists with a lithium iron phosphate compatible charging source and correct voltage setting, repeat the above steps.
The battery temperature gets too high/low during operation and triggers high/low temperature protection	The battery temperature exceeds the preset threshold.	1. Disconnect the battery from the charging source or loads. 2. Cool down/Warm up the battery. 3. The battery recovers from high/low temperature protection automatically and continues operating.
Short circuit protection is triggered.	Short circuit occurs in the battery.	1. Remove the short circuit as soon as possible 2. Charge the battery with a current greater than 1A.
Charge/Discharge over-current protection is triggered due to too high current passing through the battery.	Excessive current flows through the battery during charging or discharging.	Disconnect the battery from the charging source or loads as soon as possible.

For further assitance, contact Renogy technical support service at https://www.renogy.com/contact-us.

Specifications

General

Battery Cell Type	Lithium Iron Phosphate
Rated Capacity (0.5C, 25°C)	200Ah
Nominal Voltage	12.8V
Voltage Range	10V to 14.8V
Cycle Life (0.5C, 25°C)	4000 Cycles (80% DOD)
Dimension	14.37 x 8.86 x 7.48 in / 365 x 225 x 190 mm
Weight	50.71 lbs / 23.0 kg
Connection Method	4S4P
Terminal Bolt Size	M8 x 1.25 x 16 mm
Recommended Terminal Torque	88.5 inch•lbs to 106.2 inch•lbs / 10 N•m to 12 N•m
Protection Rating	IP65
Certification	MSDS, UN383, CE, and RoHS

Operation Parameters

Charge Voltage	14.4V
Maximum Continuous Charge Current	200A
Maximum Continuous Discharge Current	200A
Peak Discharge Current	380A@10S
Charge Temperature Range	-4°F to 131°F (-20°C to 55°C)
Discharge Temperature Range	-4°F to 122°F (-20°C to 50°C)
Storage Temperature Range	-13°F to 149°F (-25°C to 65°C)
Operation Relative Humidity	10% to 95%

Maintenance & Storage

Inspection

Please perform regular inspections following the steps below:

- Examine the external appearance of the battery. The housing and terminals of the battery shall be clean, dry, and free of corrosion.
- Check battery cables and connections. Replace any damaged cables and tighten any loose connections.

> In certain application scenarios, corrosion may occur around the terminals. Corrosion can cause increased resistance and poor contact. It is recommended to regularly apply insulation grease to each terminal. Insulation grease can form a moisture-resistant seal and protect the terminals from corrosion.

Cleaning

Please clean the battery at regular intervals following the steps below:

- Disconnect the battery from the system.
- Clear the leaves and debris from the battery.
- Clean the battery with a soft, lint-free cloth. The cloth can be dampened with water or mild soap and water if the battery is extremely dirty.
- Dry the battery with a soft, lint-free cloth.
- Keep the area around the battery clean.
- Reconnect the battery to the system.

Checking Voltage

Please check the battery voltage periodically to assess battery health. If the battery is unable to be activated with a charge/discharge current greater than 1A or the battery is activated with a open circuit voltage below 10V, the battery may have been severely overdischarged due to self-discharge or parasitic loads. Please stop using the battery until the fault can be corrected and the battery can be charged.

Storage

Please follow the steps below to ensure that the battery emerges from storage in a good condition:

- Charge the battery to 30% to 50% SOC.
- Disconnect the battery from the system.
- Store the battery in a well-ventilated, dry, clean area with temperatures between -13°F (-25°C) and 149°F (65°C).
- Do not expose the battery to direct sunlight, moisture, or precipitation.
- Handle the battery carefully to avoid sharp impacts or extreme pressure on the battery housing.
- Charge the battery at least once every three to six months to prevent it from overdischarge.
- Fully charge the battery when it is taken out of storage.

> Please follow the steps above to store the battery. Otherwise, the warranty will be void.

Important Safety Instructions

Renogy accepts no liability for any damage caused by:

- Force majeure including fire, typhoon, flood, earthquake, war, and terrorism.
- Intentional or accidental misuse, abuse, neglect or improper maintenance, and use under abnormal conditions.
- Improper installation, improper operation, and malfunction of a peripheral device.
- Contamination with hazardous substances or radiation.
- Alterations to the product without express written consent from the manufacturer.

General

- Wear proper protective equipment and use insulated tools during installation and operation. Do not wear jewelry or other metal objects when working on or around the battery.
- Keep the battery out of the reach of children.
- Do not dispose of the battery as household waste. Comply with local, state, and federal laws and regulations and use recycling channels as required.
- In case of fire, put out the fire with a FM-200 or CO_2 fire extinguisher.
- Do not expose the battery to flammable or harsh chemicals or vapors.
- Clean the battery regularly.
- It is recommended that all cables should not exceed 10 meters because excessively long cables result in a voltage drop.
- The cable specifications listed in the quick guide account for critical, less than 3% voltage drop and may not account for all configurations.
- Do not expose the battery to strong electrostatic fields, strong magnetic fields, or radiation.

Battery Safety

- Please keep the battery away from water, heat sources, sparks, and hazardous chemicals.
- Do not puncture, drop, crush, burn, penetrate, shake, strike, or step on the battery.
- Do not open, dismantle, repair, tamper with, or modify the battery.
- Do not touch any terminals or connectors.
- Please make sure any battery charger or charge controller has been disconnected before working on the battery.
- Do not connect or disconnect terminals from the battery without first disconnecting loads.
- Do not place tools on top of the battery.
- Please use suitable handling equipment for safe transportation of the battery.
- Do not insert foreign objects into the positive and negative terminals of the battery.

Renogy Support

To discuss inaccuracies or omissions in this quick guide or user manual, visit or contact us at:

renogy.com/support/downloads

contentservice@renogy.com

Questionnaire Investigation

To explore more possibilities of solar systems, visit Renogy Learning Center at:

renogy.com/learning-center

For technical questions about your product in the U.S., contact the Renogy technical support team through:

renogy.com/contact-us

1(909)2877111

For technical support outside the U.S., visit the local website below:

Canada	ca.renogy.com	China	www.renogy.cn
Australia	au.renogy.com	Japan	jp.renogy.com
Other Europe	eu.renogy.com	Germany	de.renogy.com
United Kingdom	uk.renogy.com		

Join Our Facebook Community Today. Scan the QR code to connect with like-minded people and Renogy engineers. You will get:

- Priority access to our latest launches & special events
- Insider Q&A sessions with our engineers
- Endless solar project ideas & sources

Battery Recycling

The proper disposal and recycling of batteries are essential for environment protection and circular economy. We encourage correctly disposing of your batteries when they become depleted.

You can dispose your used batteries at any of Call2Recycle or Earth911 locations that accepts Renogy rechargeable Lithium-ion and Lead-acid batteries (AGM&GEL).

www.call2recycle.org/locator

search.earth911.com

Enjoy our community's incentive program when you properly dispose of your batteries. You can earn $20 gift cards to purchase any products on our website by participating. It's a simple way to be environmentally responsible and be rewarded for recycling.

renogy.com/support

FCC Statement

This device complies with Part 15 of the FCC Rules. Operation is subject to the following two conditions:

(1) This device may not cause harmful interference.
(2) This device must accept any interference received, including interference that may cause undesired operation.

This equipment has been tested and found to comply with the limits for a Class B digital device, pursuant to Part 15 of the FCC Rules. These limits are designed to provide reasonable protection against harmful interference in a residential installation. This equipment generates, uses and can radiate radio frequency energy and, if not installed and used in accordance with the instructions, may cause harmful interference to radio communications. However, there is no guarantee that interference will not occur in a particular installation. If this equipment does cause harmful interference to radio or television reception, which can be determined by turning the equipment off and on, the user is encouraged to try to correct the interference by one or more of the following measures:

(1) Orient or relocate the receiving antenna.
(2) Increase the separation between the equipment and receiver.
(3) Connect the equipment into an outlet on a circuit different from that to which the receiver is connected.
(4) Consult the dealer or an experienced radio/TV technician for help.

FCC Radiation Exposure Statement

This equipment complies with FCC radiation exposure limits set forth for an uncontrolled environment. This equipment should be installed and operated with minimum distance 20cm between the radiator & your body.

Renogy Empowered

Renogy aims to empower people around the world through education and distribution of DIY-friendly renewable energy solutions.

We intend to be a driving force for sustainable living and energy independence.

In support of this effort, our range of solar products makes it possible for you to minimize your carbon footprint by reducing the need for grid power.

Live Sustainably with Renogy

Did you know? In a given month, a 1 kW solar energy system will...

- Save 170 pounds of coal from being burned
- Save 300 pounds of CO_2 from being released into the atmosphere
- Save 105 gallons of water from being consumed

Renogy Power PLUS

Renogy Power Plus allows you to stay in the loop with upcoming solar energy innovations, share your experiences with your solar energy journey, and connect with like-minded people who are changing the world in the Renogy Power Plus community.

@Renogy Solar @renogyofficial @Renogy

Renogy reserves the right to change the contents of this manual without notice.

Manufacturer: RENOGY New Energy Co.,Ltd
Address: No.66, East Ningbo Road Room 624-625 Taicang German Overseas Students Pioneer Park JiangSu 215000 CN

EC REP
eVatmaster Consulting GmbH
Raiffeisen Street2 B11, 63110
Rodgau, Hessen, Germany
contact@evatmaster.com

UK REP
EVATOST CONSULTING LTD
Office 101 32 Threadneedle Street,
London, United Kingdom, EC2R 8AY
contact@evatost.com

UN38.3 RoHS