Renogy PRO
Power Management System

12V | 60A

RPM1260DD

VERSION A0
April 30, 2026

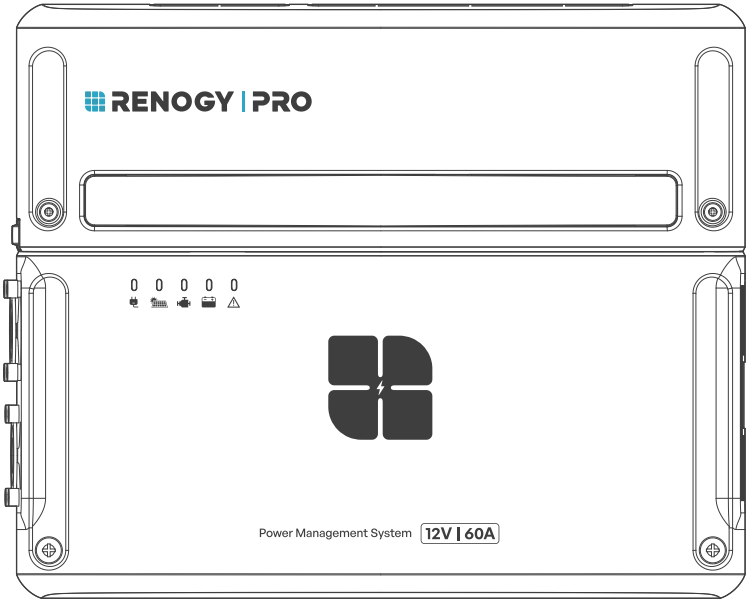

QUICK GUIDE

Before Getting Started

The quick guide provides important operation and maintenance instructions for Renogy PRO 12V 60A Power Management System (hereinafter referred to as PMS).

Read the quick guide carefully before operation and save it for future reference. Failure to observe the instructions or precautions in the quick guide can result in electrical shock, serious injury, or death, or can damage the PMS, potentially rendering it inoperable.

- Renogy ensures the accuracy, sufficiency, and the applicability of information in the quick guide at the time of printing due to continual product improvements that may occur.
- Renogy assumes no responsibility or liability for personal and property losses, whether directly and indirectly, caused by the user's failure to install and use the product in compliance with the quick guide.
- Renogy is not responsible or liable for any failure, damage, or injury resulting from repair attempts by unqualified personnel, improper installation, and unsuitable operation.
- The illustrations in the quick guide are for demonstration purposes only. Details may appear slightly different depending on product revision and market region.
- Renogy reserves the right to change the information in the quick guide without notice. For the latest quick guide, visit renogy.com.

Disclaimer

Renogy PRO 12V 60A Power Management System Quick Guide © 2026 Renogy. All rights reserved.

RENOGY and RENOGY are registered trademarks of Renogy.

- All information in the quick guide is subject to copyright and other intellectual property rights of Renogy and its licensors. The quick guide may not be modified, reproduced, or copied, in whole or in part, without the prior written permissions of Renogy and its licensors.
- The registered trademarks in the quick guide are the property of Renogy. The unauthorized use of the trademarks is strictly prohibited.

Online User Manual

Visit your local Renogy website to view the complete user manual.

Table of Contents

1. Get to Know PMS 04
1.1. What's In the Box? 04
1.2. Symbols on Product 04
1.3. Product Overview 05
1.4. Dimensions 06
1.5. System Setup 06
1.6. Internal Circuit Diagram 07
1.7. DC Loads Wiring Diagram 08
2. Preparation 09
2.1. Recommended Tools 09
2.2. How to Size the Fuse? 09
2.3. How to Size Wires? 09
2.4. How to Install Cables on the PMS? 11
3. Installation 12
3.1. Plan a Mounting Site 12
3.2. Cable Routing 12
3.3. Remove the Cover 13
3.4. Mounting 13
3.5. Power Off 14
3.6. Install the Remote Switch Connector 14
3.7. Connect to the House Battery 15
3.8. Connect to the Solar Panel 16
3.9. Connect to the Starter Battery 16
3.10. Connect to the Grid Power (Optional) 18
3.11. Connect to the DC Loads 19
3.12. Install a Temperature Sensor 20
3.13. Install a Water Level Sensor 21
3.14. Inverter Remote Wiring 22
3.15. Communication Wiring (Optional) 22
3.16. Install the Cover 24
4. Configuration 24
4.1. Power On/Off 24
4.2. LED Indicators 25
4.3. Monitor 26
4.4. Charging logic 27

4.5. Check and Replace Blade Fuses 28
5. Important Safety Instructions 29
5.1. General 29
5.2. PMS Safety 29
5.3. Battery Safety 29
5.4. Solar Panel Safety 29
Renogy Support 30
Warranty Statement 31

1. Get to Know PMS

1.1. What's In the Box?

PMS × 1

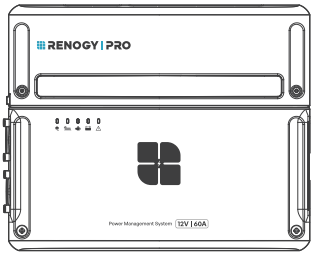

Quick Guide × 1

ST6.3mm

Mounting Screws x 4

Remote Switch Connector x 1

AC Input Cable x 1

⚠ Make sure that all accessories are complete and free of any signs of damage.

⚠ The accessories and product manual listed are crucial for the installation, excluding warranty information and any additional items. Please note that the package contents may vary depending on the specific product model.

1.2. Symbols on Product

Symbol	Description	Symbol	Description
	Read and understand the instruction manual before use.		Do not dispose of the product together with household waste.
	Materials used are recyclable.		Australian compliance certifications
CE	CE mark of conformity EU/EEA Importer	T12AL	T12AL slow-blow fuse specification marking
E57 10 R - 06 XXXX	Product complies with ECE Regulation No. 10.		For indoor use only

1.3. Product Overview

External

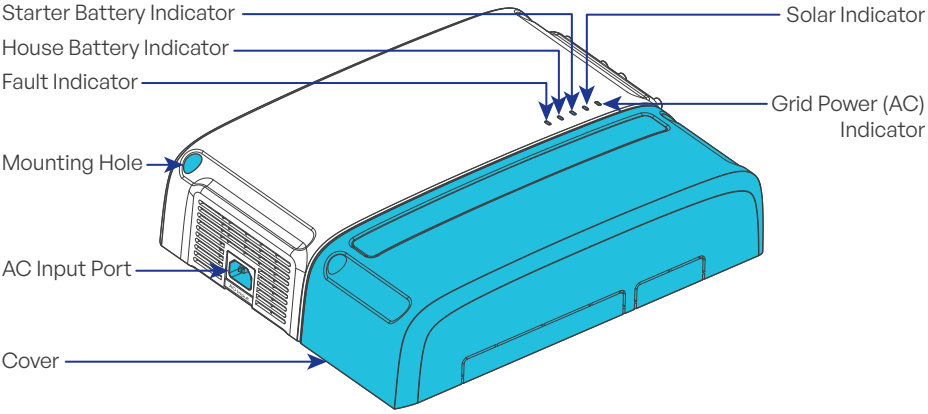

Internal (remove cover)

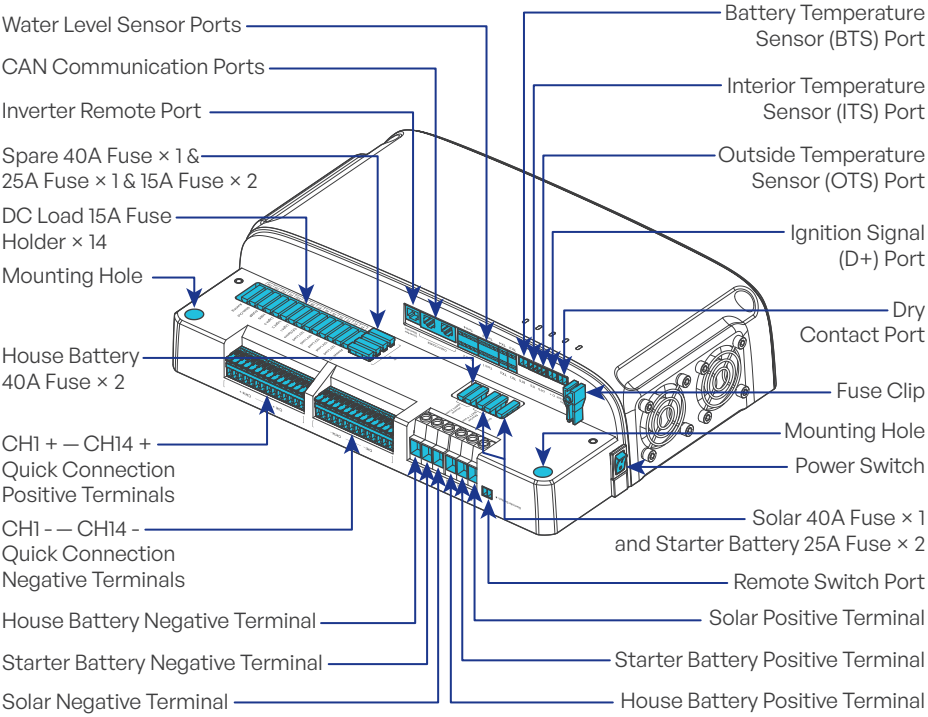

1.4. Dimensions

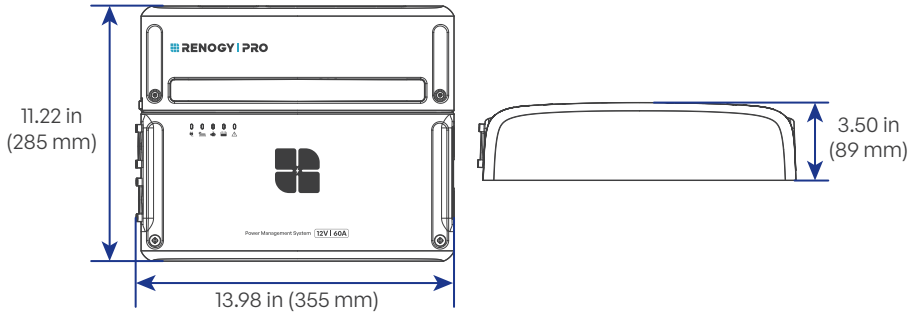

Dimension tolerance: ±0.02 in (0.5 mm)

1.5. System Setup

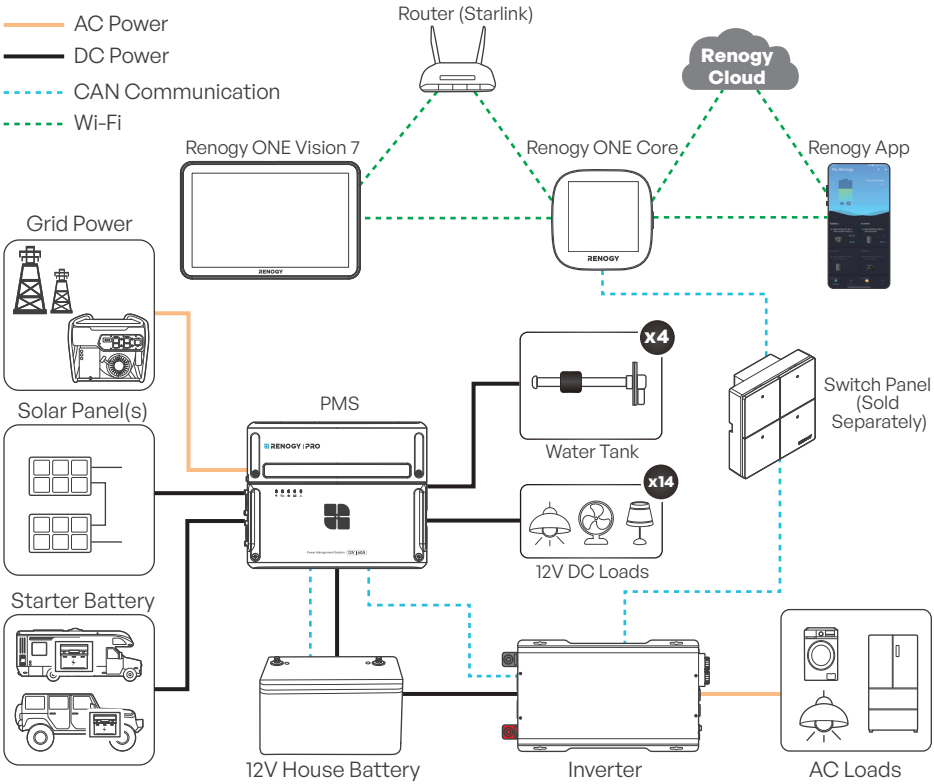

1.6. Internal Circuit Diagram

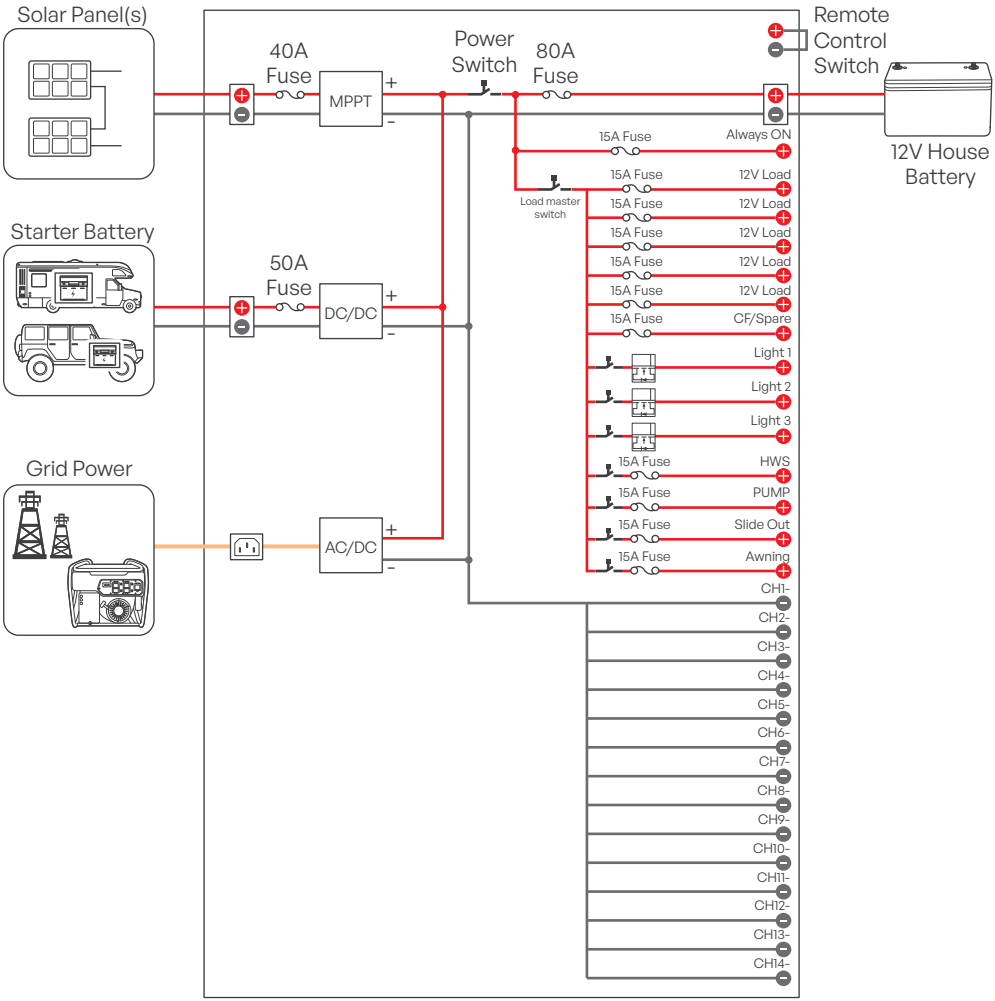

1.7. DC Loads Wiring Diagram

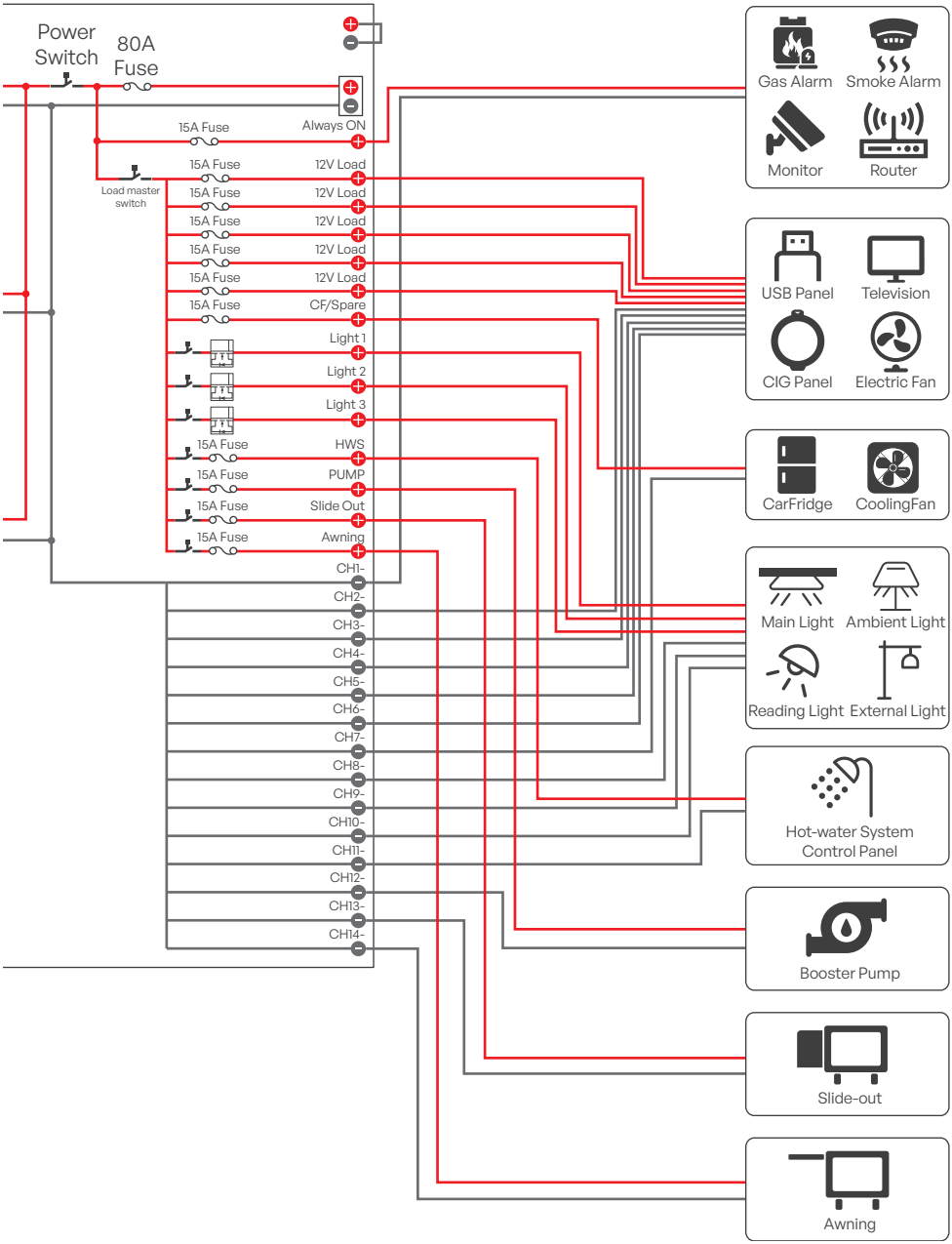

2. Preparation

2.1. Recommended Tools

Insulating Gloves | Phillips Screwdriver (#2) | Wire stripper | Cold-Pressed Terminal Crimping Pliers | Ferrule With Insulation

2.2. How to Size the Fuse?

We still recommend installing additional fuses between the PMS and the house battery, the starter battery, and the solar panel.

Installation Location: The fuses used in battery connections must be installed on the side close to the positive terminal of the batteries, ideally within 20 centimeters.

Fuse Size	50A-60A Fuse

2.3. How to Size Wires?

Wire Standard: Select UL multi-strand soft copper wire with a temperature rating above 221ºF (105ºC). This type of wire has excellent high-temperature performance and a higher theoretical current-carrying capacity.

Fuse Matching Principle: The fuse specifications should be strictly smaller than the cable's maximum current rating to ensure 100% protection for the cable. The fuse should blow preferentially in the event of overcurrent.

Cable Length: Refers to the sum of the lengths of the positive and negative cables.

⚠ The recommended terminal types in the table below apply to the PMS . For terminal types required by other devices, please consult their respective user manuals.

PMS to House Battery

To ensure the house battery (especially LiFePO4 batteries) reaches a full 100% state of charge, install the PMS as close to the house battery as possible (recommended within 20 cm), and strongly recommend keeping it within 1.5 m to minimize end-of-charge voltage drop.

Cable Length (ft) / (m)	Cable Gauge Size	Recommended Terminal Types
0 ft to 5 ft (0 m to 1.5 m)	8 AWG (8.37 mm^2)	Cold-Pressed Terminal E10-12
5 ft to 10 ft (1.5 m to 3 m)	6 AWG (13.30 mm^2)	Cold-Pressed Terminal E16-12
10 ft to 16 ft (3 m to 5 m)	6 AWG (13.30 mm^2)	Cold-Pressed Terminal E16-12

PMS to Stater Battery

Cable Length (ft) / (m)	Cable Gauge Size	Recommended Terminal Types
0 ft to 10 ft (0 m to 3 m)	10 AWG (5.26 mm^2)	Cold-Pressed Terminal E6012
10 ft to 20 ft (3 m to 6 m)	8 AWG (8.37 mm^2)	Cold-Pressed Terminal E10-12
20 ft to 30 ft (6 m to 9 m)	6 AWG (13.30 mm^2)	Cold-Pressed Terminal E16-12

PMS to Solar Panel

Wire Limitations: Photovoltaic wires available on the market with MC4 waterproof connectors are typically 12 AWG or 10 AWG. To ensure safety, be sure to keep the total input current of the solar array controlled at 20A or below by using series or parallel connections. If you need to parallel multiple solar arrays, use a DC combiner to parallel the arrays, then connect the combiner to the PMS. Note: after paralleling, select cable sizes based on the total combined current.

Voltage Warning: Connecting in series will increase the voltage. The total open-circuit voltage (Voc) of all series panels must not exceed the maximum allowable input voltage, as exceeding this limit may cause equipment damage!

Total output current of Solar Panels	Cable Length (ft) / (m)	Cable Gauge Size	Recommended Terminal Types
0-10A	0 ft to 16 ft (0 m to 5 m)	12 AWG (3.33 mm^2)	Cold-Pressed Terminal E4012
	16 ft to 26 ft (5 m to 8 m)	10 AWG (5.26 mm^2)	Cold-Pressed Terminal E6012
10-20A	0 ft to 16 ft (0 m to 5 m)	10 AWG (5.26 mm^2)	Cold-Pressed Terminal E6012
	16 ft to 26 ft (5 m to 8 m)	10 AWG (5.26 mm^2)	Cold-Pressed Terminal E6012

PMS to DC Load

Cable Length (ft) / (m)	Cable Gauge Size	Recommended Terminal Types
0 ft to 5 ft (0 m to 1.5 m)	14 AWG (2.08 mm^2)	Cold-Pressed Terminal E2512
5 ft to 10 ft (1.5 m to 3 m)	12 AWG (3.33 mm^2)	Cold-Pressed Terminal E4012
10 ft to 16 ft (3 m to 5 m)	12 AWG (3.33 mm^2)	Cold-Pressed Terminal E4012

2.4. How to Install Cables on the PMS?

House Battery, Starter Battery, and Solar Terminals

The illustration is based on the Solar+ terminal as an example; the wiring methods for all terminals are the same.

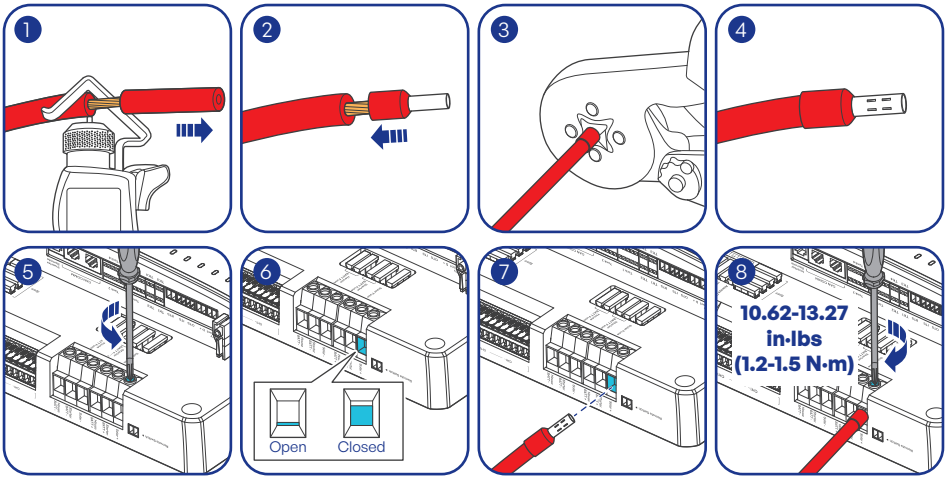

DC Load Terminals

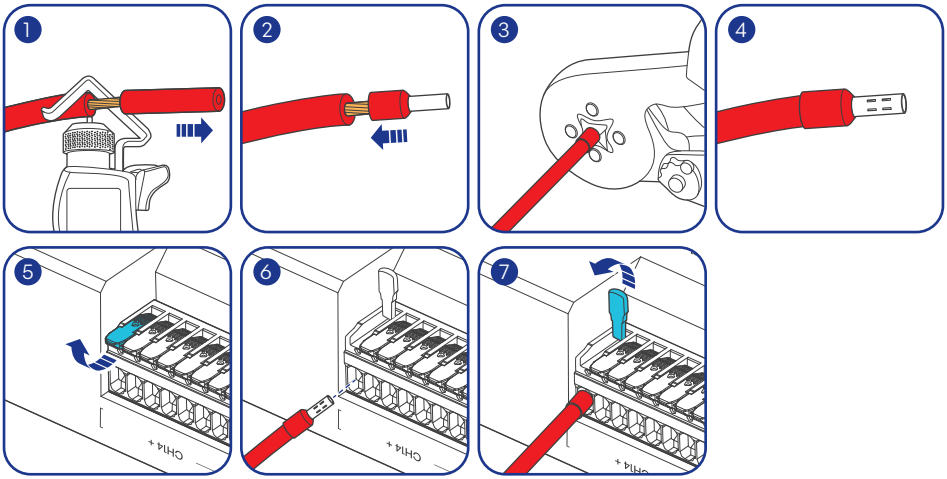

3. Installation

3.1. Plan a Mounting Site

The PMS requires adequate clearance for installation, wiring, and ventilation. The minimum clearance is provided below.

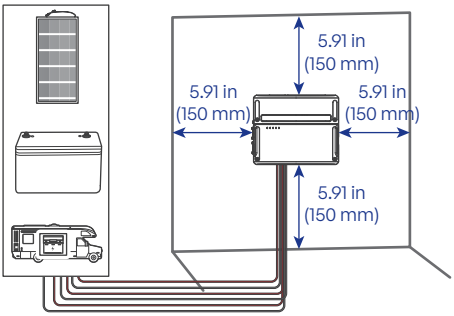

-4°F to 140°F
-20°C to 60°C
(Reduce power when the temperature is above 113°F/45°C.)

0% to 95%

The PMS should be installed on a flat surface protected from direct sunlight.

3.2. Cable Routing

If the cables are routed on the wall surface, you can skip this section.

If the cables are routed inside the wall, you must first use a Skill Saw to cut openings in the wall for cable routing. Refer to the figure below for the opening size. Then pre-route the cables for the house battery, starter battery, solar panels, and loads to the cable openings.

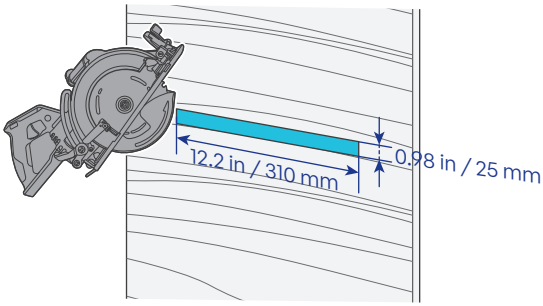

3.3. Remove the Cover

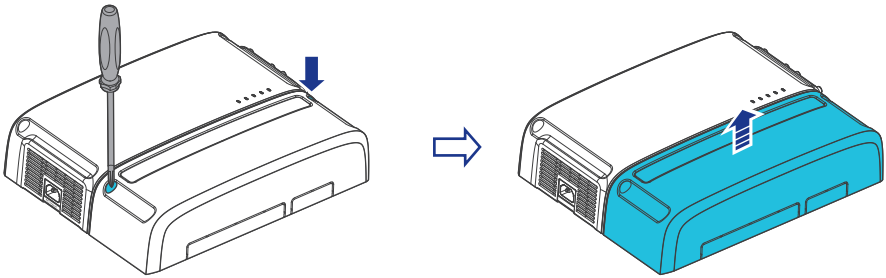

3.4. Mounting

Cables Routed Inside the Wall

Align the upper edge of the PMS with the lower edge of the cable opening, and secure the PMS using the included mounting screws.

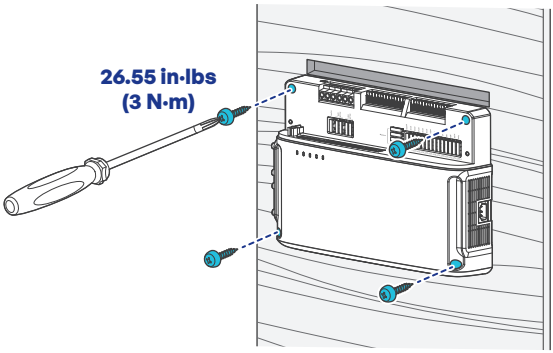

Cables Routed on the Wall Surface

Secure the PMS using the included mounting screws.

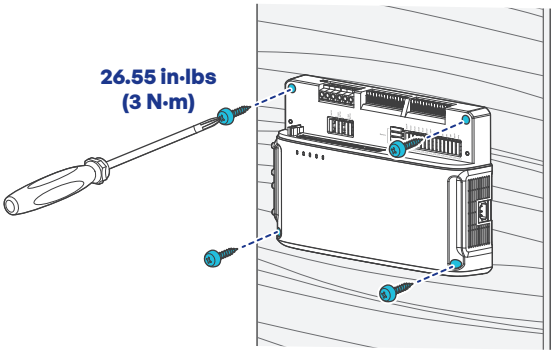

3.5. Power Off

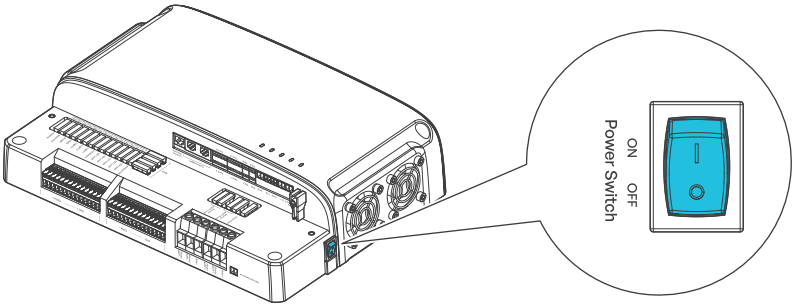

3.6. Install the Remote Switch Connector

The Remote Switch Connector must be installed; otherwise, the Power Switch of the PMS will not be able to control the PMS.

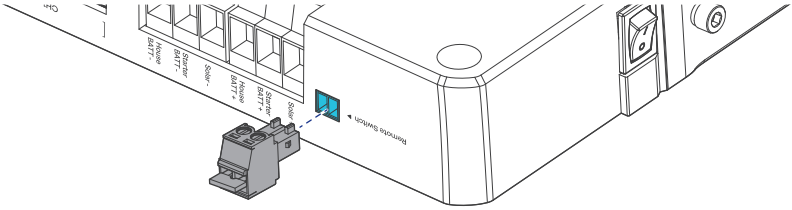

If the PMS is installed in a location that is difficult to access, you can also connect an external independent switch (sold separately) to the Remote Switch Connector to turn the PMS on and off. Note: After connecting an external switch, the Power Switch on the PMS must be set to the ON position.

Recommended Accessories

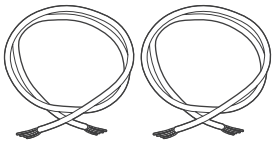

Bare Wires (20 AWG)

When wiring, if the bare wire is too soft to be secured inside the connector, you can use tinning or an E0510 tubular terminal (ferrule) for the connection.

The Remote Switch is non-polarized and can be connected in either direction.

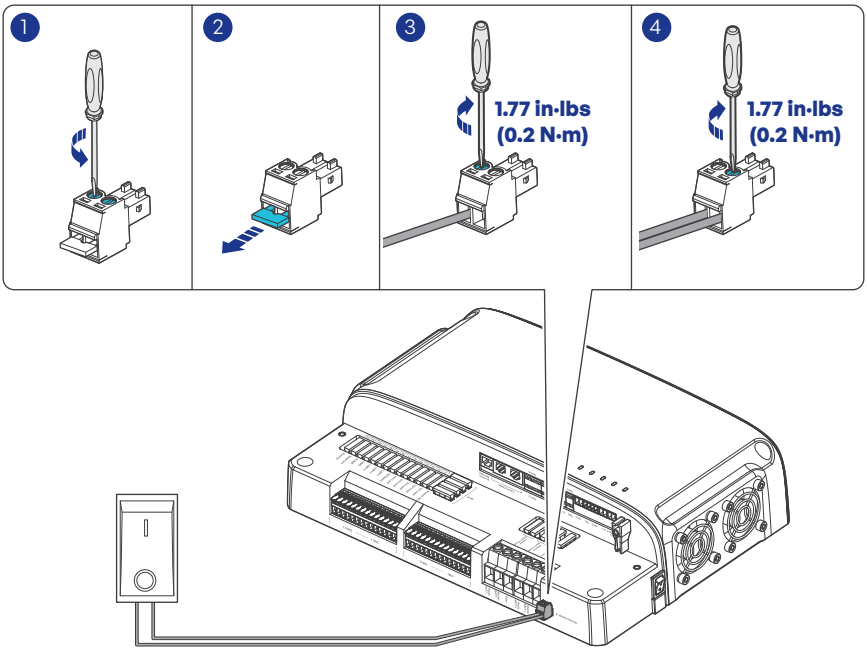

3.7. Connect to the House Battery

The PMS can only be connected to 12V deep-cycle, gel-sealed lead-acid batteries (GEL), flooded lead-acid batteries (FLD), sealed lead-acid batteries (SLD/AGM) or lithium iron phosphate batteries (LFP).

The PMS battery type is set to lithium iron phosphate (LFP) by default. If connecting non-lithium batteries, please use the Renogy app to change the battery type immediately after installation; otherwise, damage to the PMS or the battery may occur, thereby voiding the warranty.

Always connect the PMS to a battery before connecting it to a solar panel and starter battery to ensure safe and efficient operation.

When wiring, always connect the negative terminal first, followed by the positive terminal.

⚠ For installation details, see the user manual of the battery in use.

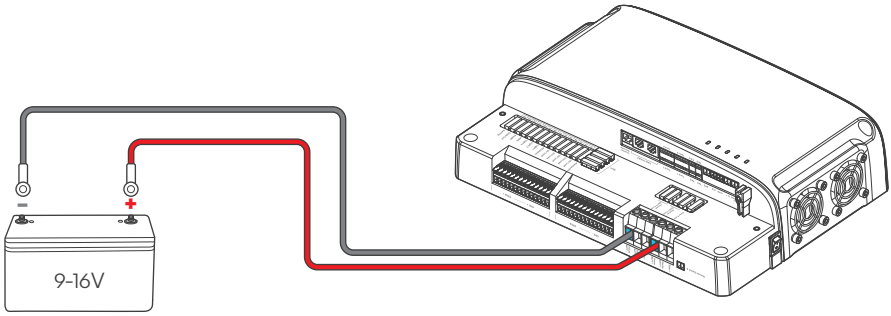

3.8. Connect to the Solar Panel

Ensure that the solar module output does not exceed the values specified in the table below. If the output voltage of the solar module exceeds 42V, the PMS will stop working, exit protection when wait voltage falls below 37V. **If it exceeds 42V, it will directly damage the PMS.**

Solar Panels Power	Solar Panels Voltage (Voc)	Solar Panels Short-circuit Current (Isc)	Maximum Charging Current from Solar Panels
≤ 800W	15V - 42V	≤ 40A	30A

When wiring, always connect the negative terminal first, followed by the positive terminal.

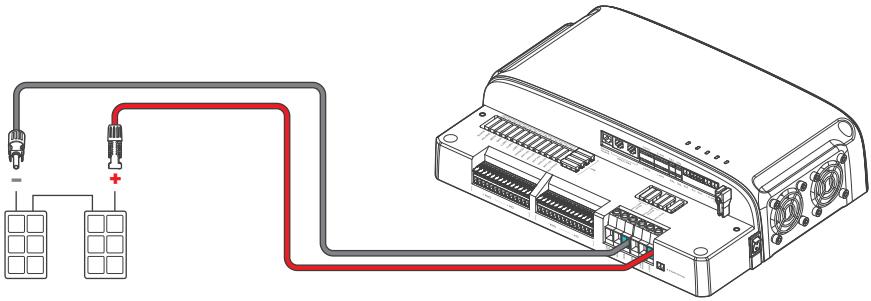

3.9. Connect to the Starter Battery

After the PMS has fully charged the house battery, it can also charge the starter battery. When wiring, always connect the negative terminal first, followed by the positive terminal.

Starter Battery Voltage	Maximum Input Current from Starter Battery	Rated Charging Power	Maximum Charging Current from Starter Battery
9 - 16V	40A	450W Max	30A

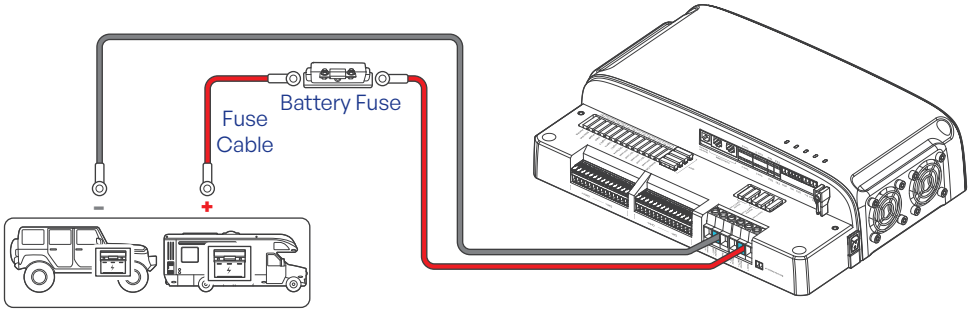

For the smart alternator, an IGN signal wire must be installed. Connect the IGN Signal Wire's connector to the Ignition Signal (D+) Port on the PMS, while the other end connects to the IGN terminal of the smart alternator. Alternatively, you can connect it to the ignition fuse in the vehicle's fuse box. To do this, pull out the ignition fuse vertically, insert the exposed wire into the pinhole, and then reinsert the ignition fuse vertically.

Recommended Components

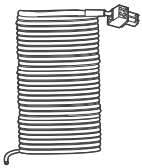

IGN Signal Wire (Separate purchase via OE channel)

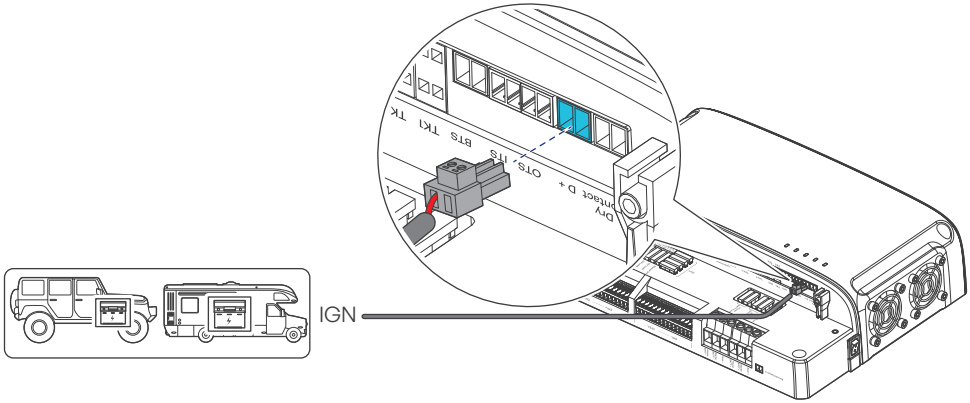

The PMS supports two operating modes, which can be switched using the Renogy ONE Core or Renogy app.

Mode 1: IGN (Vehicle Engine Detection Mode)

When shipped from the factory, the PMS is primarily controlled by the IGN (ignition) signal for start/stop operation.

Start condition: When an IGN connection is detected and a 12V signal is received, the PMS checks the starter battery voltage. If the voltage is >12V and remains so for 15 seconds, the PMS begins charging the house battery.

Mode 2: ALT (Altternator Type Selection Mode)

Traditional alternators do not require the IGN signal wire to be installed. Therefore, after the PMS installation is complete, you need to switch to ALT mode on the Renogy ONE Core or Renogy app, and configure it according to your vehicle's alternator type, so that the PMS can operate properly.

When switching to ALT mode, the PMS relies solely on voltage changes from the starter battery to control start/stop. The specific logic depends on the type of vehicle alternator:

- **Scenario A: With a Traditional Alternator**

Start charging: Starter battery voltage >13.2V for 23 seconds

Stop charging: Starter battery voltage <12.7V

- **Scenario B: With a Smart Alternator**

Start charging: Starter battery voltage >12.0V for 23 seconds

Stop charging: Starter battery voltage <11.5V

3.10. Connect to the Grid Power (Optional)

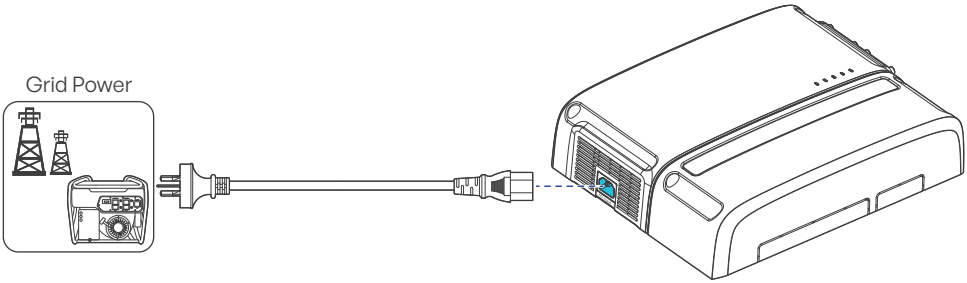

Dry Contact (Automatic Generator Start)

This port provides a dry contact relay output for external control purposes.

It supports applications such as automatic generator start, external relay triggering, alarm signaling, or other user-defined control functions.

When used for AGS, if the battery voltage reaches or falls below the low voltage reconnect value, the PMS will send a 5-minute.

Read the user manual of the AC Input source carefully before connection.

Typically, a generator's dry contact has three terminals—NC (Normally Closed), NO (Normally Open), and C (Common)—or two of them.

- For three terminals: select either NC and C, or NO and C, and connect them to the PMS's Dry Contact Port.
- For two terminals: connect both to the PMS's Dry Contact Port.

The PMS's Dry Contact Port only collects and sends signals; there is no need to distinguish pin definitions.

Do not install the PMS near any generator supporting automatic generator on/off because these generators exhaust dangerous fumes in operation.

Please prepare an appropriate number and length of bare wires yourself. There is no polarity requirement for the bare wires.

For the wiring method of the AC generator terminal, please refer to its user manual.

Recommended Accessories

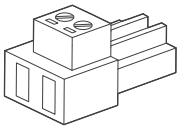

Connector (Separate purchase via OE channel)

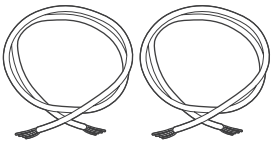

Bare Wires (20 AWG)

When wiring, if the bare wire is too soft to be secured inside the connector, you can use tinning or an E0510 tubular terminal (ferrule) for the connection.

The figure below takes an AC generator with NC and C dry contacts as an example.

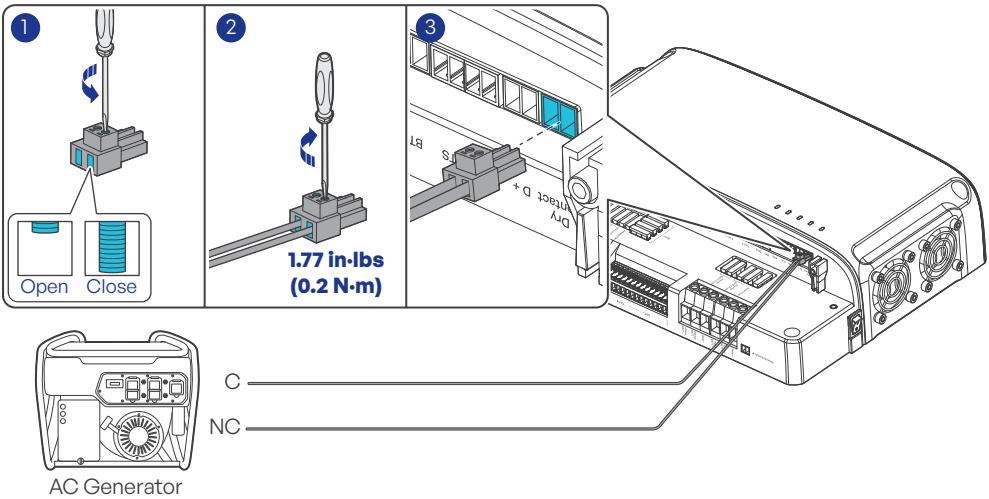

3.11. Connect to the DC Loads

All diagrams in this section use an arbitrary single circuit as an example.

Except for the Always on Load, the loads on other ports can be collectively switched on and off using the main load switch function in the Renogy ONE Core or Renogy app. The main load switch function is disabled by default. After the PMS is installed, please enable the main load switch through the Renogy ONE Core or Renogy app.

Always on Load (CH1)

You can connect loads that need to remain on continuously to this port.

Note: Output on this port cannot be turned off. Even if the Power Switch is set to the OFF position, the PMS will continue to supply power until the battery triggers low-voltage protection, at which point power delivery will stop.

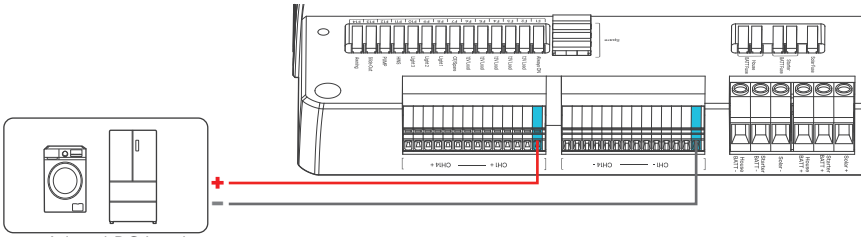

Ordinary Distribution Load (CH2-CH7)

Connect the loads to this ports to provide overcurrent protection and data monitoring functionality.

Note: When the power switch is set to the OFF position, the PMS will stop supplying power.

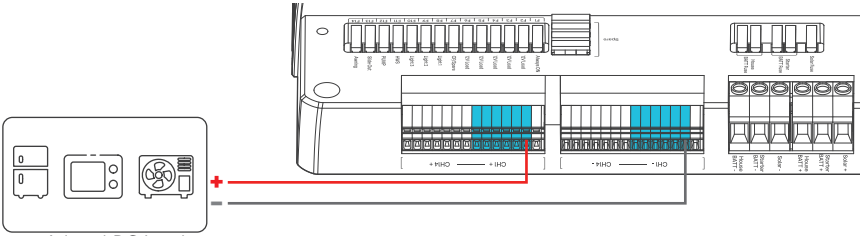

15A (max) DC Load

Intelligent Distribution Load (CH8-CH14)

You can control the load connected to this ports via the Renogy ONE Core or Renogy app. You can also connect to the Renogy Control Panel via CAN communication to switch these loads on and off.

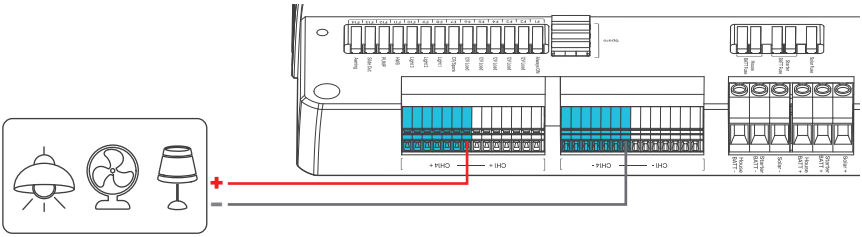

15A (max) DC Load

If your lights support PWM dimming, you can connect them to the corresponding terminals (CH8-CH10) on the PMS and adjust brightness using the Renogy ONE Core or Renogy app.

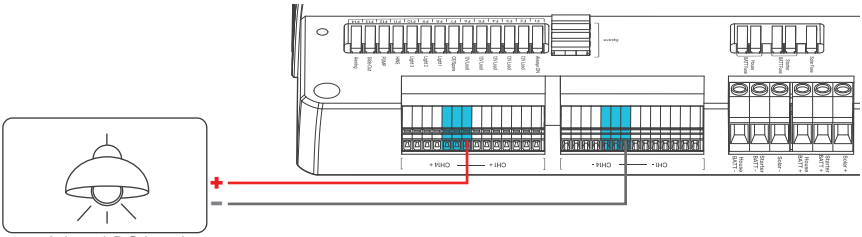

15A (max) DC Load

3.12. Install a Temperature Sensor

Recommended Components

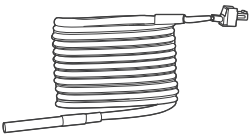

Renogy Temperature Sensor (Available at Renogy official stores)

Battery Temperature Sensor (BTS)

The temperature sensor measures the surrounding temperature of the battery and compensates the floating charge voltage when the battery temperature is low.

> ⚠ The battery temperature sensor cable can only be used with lead-acid batteries. Do not use the temperature sensor on a LiFePO4 (LFP) battery which comes with a battery management system (BMS).

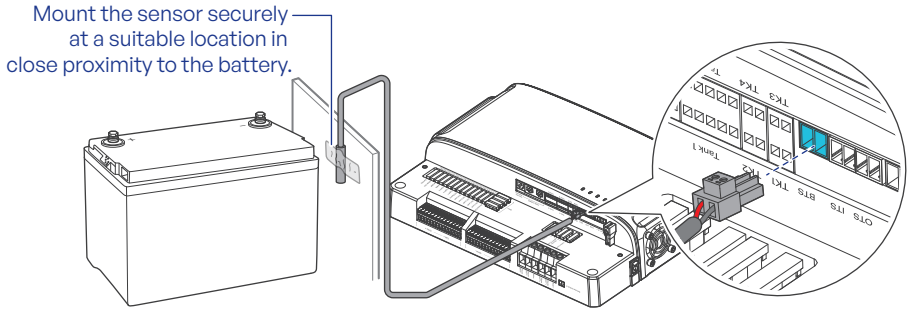

Interior (ITS) & Outside (OTS) Temperature Sensor

You can place the sensor inside or outside the vehicle to capture real-time temperature readings and view them through the Renogy ONE Core or Renogy app.

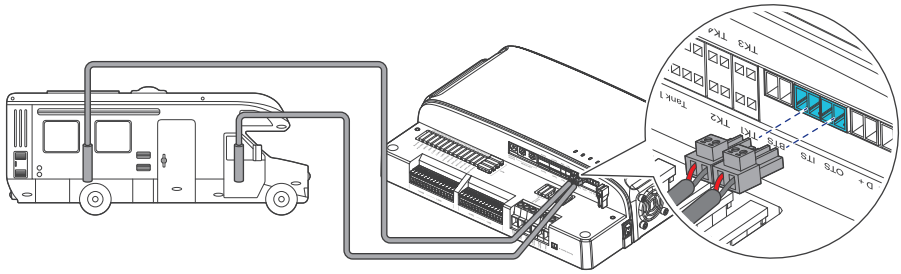

3.13. Install a Water Level Sensor

You can connect up to four Renogy dual-wire resistive liquid level sensors and four Renogy 5-wire capacitive water level sensors to the PMS to monitor water levels in gray water tanks, fresh water tanks, humidifiers, and more.

Insert the sensor connector into the corresponding Water Level Sensor Port on the PMS, then place the probe into the tank. Refer to the user manual for your specific water level sensor for detailed instructions.

When using for the first time, you need to calibrate the water level via the Renogy ONE Core or the Renogy app. Both Automatic Calibration and Manual Calibration are supported. Simply follow the step-by-step instructions provided in the Core or the app to complete the calibration.

Dual-Wire Resistive Liquid Level Sensors

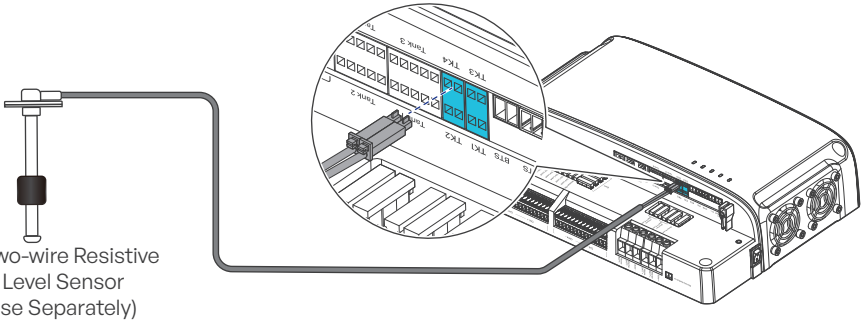

Renogy Two-wire Resistive
Liquid Level Sensor
(Purchase Separately)

5-Wire Capacitive Water Level Sensors

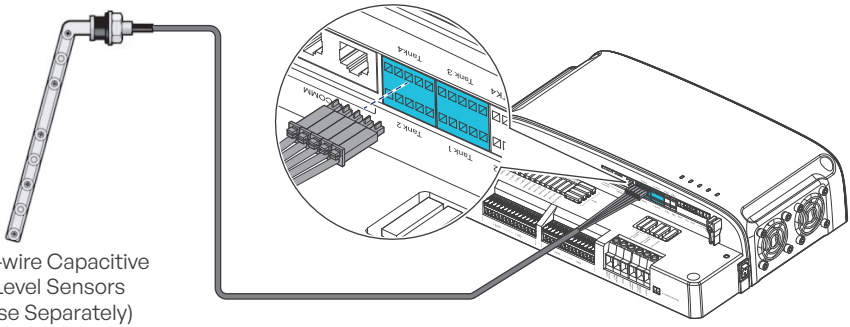

Renogy 5-wire Capacitive
Water Level Sensors
(Purchase Separately)

3.14. Inverter Remote Wiring

The PMS can remotely turn the Renogy inverter on or off. Follow the steps below to complete the wiring:

Step 1: Connect a RJ12 Ethernet cable (not included) from an inverter to the Inverter Remote Port on the PMS.

Step 2: Rock the ON/OFF/REM Switch of the inverter to the REM position. For details, see the user manual of the specific inverter.

Then, you can control the inverter via the Renogy ONE Core or the Renogy app.

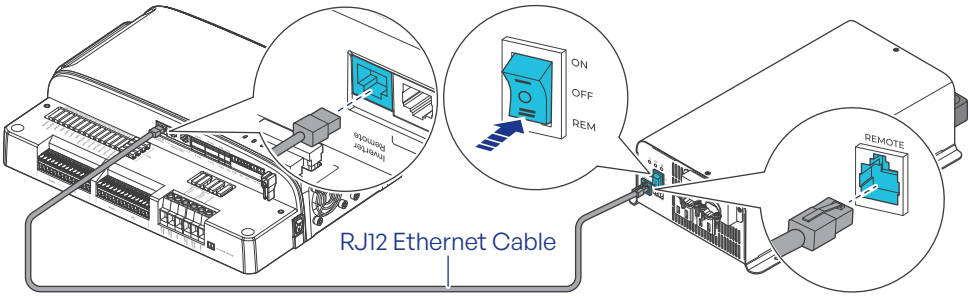

3.15. Communication Wiring (Optional)

The PMS provides two CAN communication ports (CAN COMM) for RS-485 or CAN communication with Renogy power supply and monitoring devices, such as Core, charge controller, battery, and battery charge.

For interoperability suggestions concerning non-Renogy power devices and other technical support issues, please contact Renogy customer service via renogy.com/contact-us.

Terminal Definitions

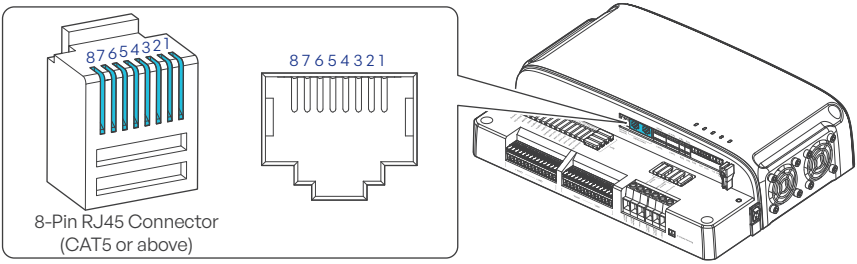

Pinout No.	Definition	Pinout No.	Definition
1	N/A	5	DC IN-
2	RS-485 A	6	CAN_H
3	RS-485 B	7	DC IN+
4	CAN_GND	8	CAN_L

Powered Devices Wiring

Both CAN communication ports on the PMS are powered. Use CAT5 or higher Ethernet cables to connect devices (such as Renogy ONE Core, or Renogy Control Panel) to the PMS. The PMS supplies power directly to the devices through the CAN communication ports, eliminating the need for additional power wires.

- **Renogy ONE Core:** Monitor the operational status of the PMS and customize the operational parameters.
- **Renogy Control Panel:** An intelligent scene and load control panel designed specifically for RVs and RV parks. You can turn the DC loads connected to the PMS on or off (excluding the Always on Load and Ordinary Distribution Loads).

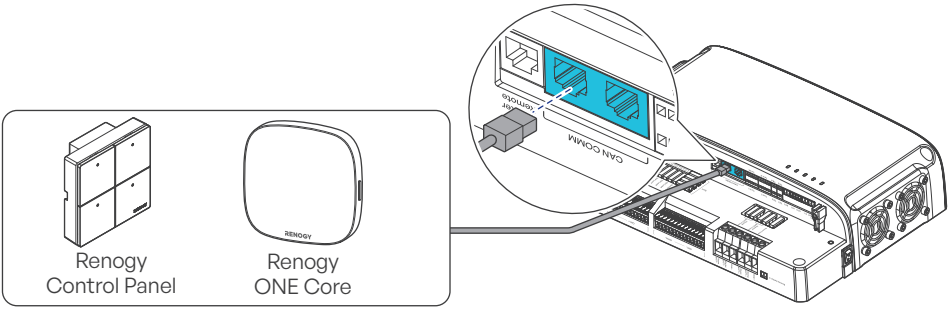

CAN Communication Wiring

Using a communication cables, connect the devices sequentially through their CAN communication ports to establish mutual communication. For details, please visit renogy.com/Support/Learning Center/Communication to view the articles "CAN Communication Connections" and "RV-C Communication Connections."

3.16. Install the Cover

Before installing the cover, inspect all cables to ensure correct and secure connections to prevent reverse connections and poor contacts.

Cables Routed Inside the Wall

Reattach the cover to the PMS using the original cover screws.

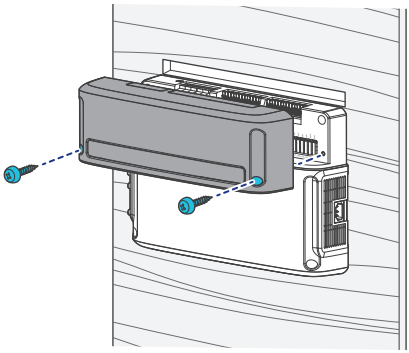

Cables Routed on the Wall Surface

Remove the two removable knock-out panels on the cover, reattach the cover to the PMS using the original cover screws.

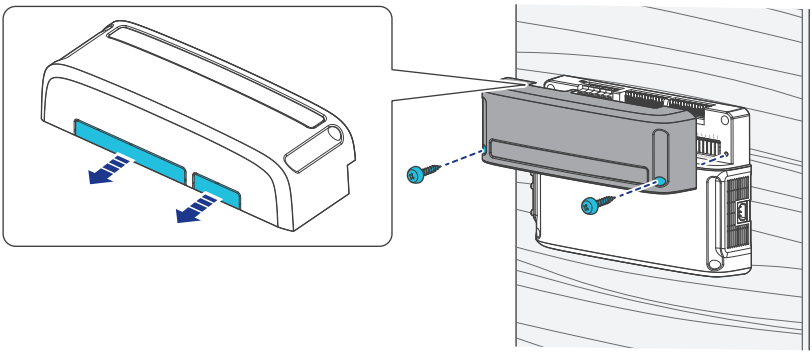

4. Configuration

4.1. Power On/Off

The Power Switch on the PMS and the Main Load Switch on the Renogy ONE Core or Renogy app must be used together. See the table below for the detailed logic.

Power Switch	Main Load Switch	Power Input	Dc Load Status		Charging Status
			Always on load	Not always on load	
Off	/	Grid Power (AC)	On	Off	No
		Starter Battery	On	Off	No
		Solar Panel	On	Off	Yes

Power Switch	Main Load Switch	Power Input	Dc Load Status		Charging Status
			Always on load	Not always on load	
On	Off	Grid Power (AC)	On	Off	Yes
		Starter Battery	On	Off	Yes
		Solar Panel	On	Off	Yes
	On	Grid Power (AC)	On	On	Yes
		Starter Battery	On	On	Yes
		Solar Panel	On	On	Yes

4.2. LED Indicators

The PMS turns on automatically after power on with the LED indicators working in accordance with the relative operating status.

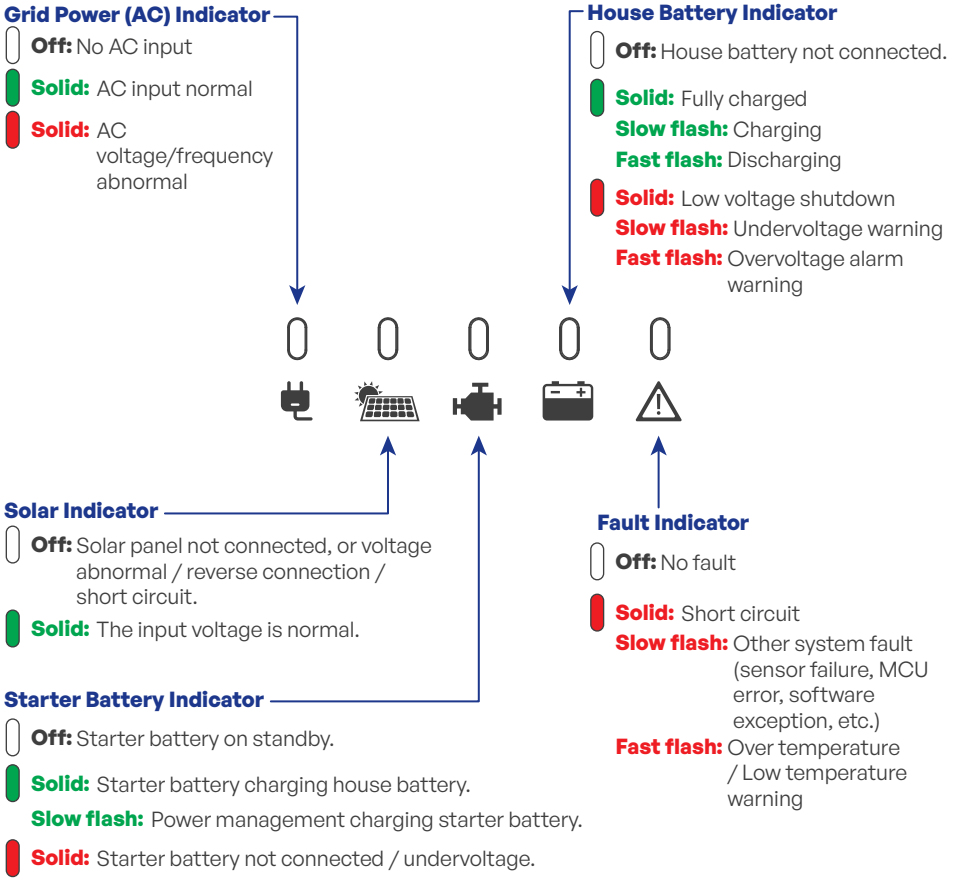

Check out the graphic indications of ON, OFF, Solid, Slow Flash, and Fast Flash of LEDs in the table below:

LED ON		LED OFF	
LED Pattern	**Graphic Expression**		
Solid			
Slow Flash	1s 1s 2s		
Fast Flash	0.25s 0.25s 0.5s		

4.3. Monitor

Download the Renogy app. Login to the app with your account.

Renogy App

GET IT ON Google Play

Download on the App Store

⚠ The version of the Renogy app might have been updated. Illustrations in the user manual are for reference only. Follow the instructions based on the current app version.

⚠ To ensure optimal system performance, keep the phone or Renogy ONE Core within 10 feet (3 m) of the PMS.

⚠ You can receive fault alarms on Renogy app when the PMS is faulty. Please login to the Renogy app for troubleshooting details.

Short-Range Monitoring via Renogy App

Pair the PMS with the Renogy app. Monitor and modify the parameters of the PMS via the app.

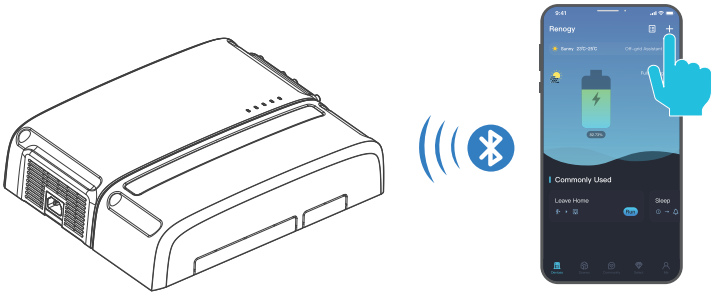

Wireless Long-Range Monitoring

4.4. Charging logic

Charging Current

Girl Power (AC)	Solar Panel	Alternator	Total Charging Current
35A Max	30A Max	30A Max	60A Max

Charging Priority

Input Source	Priority Ranking
Girl Power (AC) & Solar Panel	1. Girl Power (AC) 2. Solar Panel
Girl Power (AC) & Stater Battery	1. Girl Power (AC) 2. Stater Battery
Solar Panel & Stater Battery	1. Solar Panel 2. Stater Battery
Girl Power (AC) & Solar Panel & Stater Battery	1. Girl Power (AC) 2. Solar Panel 3. Stater Battery

4.5. Check and Replace Blade Fuses

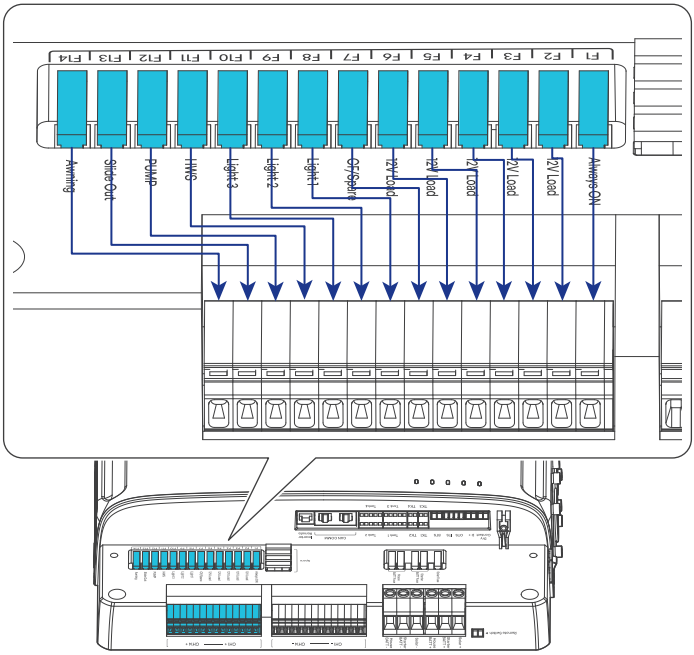

When a fuse blows, the white indicator light on the fuse will illuminate, indicating that the fuse needs to be replaced.

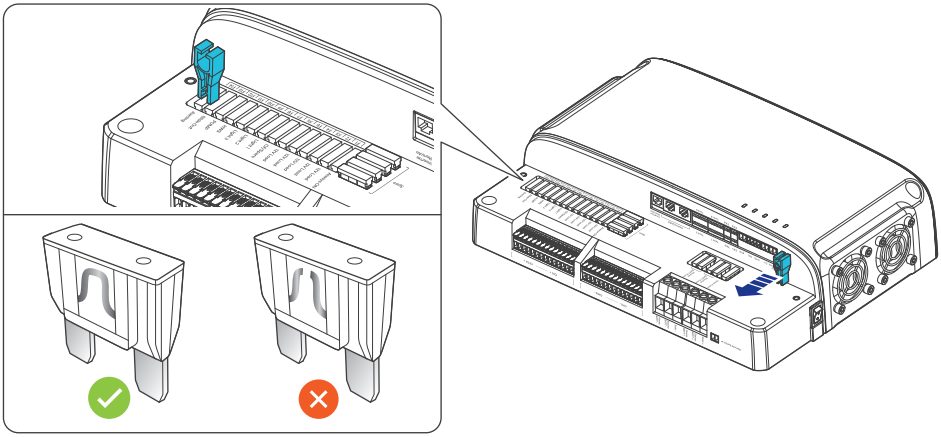

5. Important Safety Instructions

5.1. General

- Wear proper protective equipment and use insulated tools during installation and operation. Do not wear jewellery or other metal objects when working on or around the PMS.
- Keep the PMS out of the reach of children.
- Do not dispose of the PMS as household waste. Comply with local, state, and federal laws and regulations and use recycling channels as required.
- In the event of a fire, use a fire extinguisher suitable for electrical equipment, such as a FM-200, CO_2, or dry powder extinguisher. A fire blanket or sand can also be used to extinguish the fire. If a suitable fire extinguisher is not available, evacuate immediately and contact the fire department.
- If installing this PMS in a marine application or boat, please consult your qualified marine electrician prior to installation.
- Do not expose the PMS to flammable or harsh chemicals or vapors.
- Clean the PMS regularly.
- Do not puncture, drop, crush, penetrate, shake, strike, or step on the PMS.
- Do not open, disassemble, repair, tamper with, or modify the PMS.
- Connect the negative prior to the positive cable when connecting any device.

5.2. PMS Safety

- Install the PMS on a vertical surface - protected from direct sunlight, high temperatures, and water. Make sure there is good ventilation.
- Keep the PMS away from heating equipment.
- Do not insert foreign objects into the PMS.
- Confirm the polarities of the devices before connection. A reverse polarity contact can result in damage to the PMS, thus voiding the warranty.
- Do not touch the connections while the PMS is in operation.
- When disconnecting all connections from the PMS, always disconnect the starter battery and solar panel first, followed by the house battery. Disconnect the negative terminal before the positive terminal.
- Before performing maintenance or cleaning, make sure to disconnect all connections from the PMS.

5.3. Battery Safety

- Do not use batteries if there is any damage.
- Do not touch the exposed electrolyte or powder if the battery is damaged.
- Risk of explosion! Never install the PMS in a sealed enclosure with flooded batteries! Do not install the PMS in a confined area where battery gases can accumulate.
- Prior to installing the PMS, ensure all battery groups are installed properly.

5.4. Solar Panel Safety

- Do not use the solar panel(s) if there is any damage.
- Prior to connecting the PMS to the solar panel(s), shade the solar panel(s).
- Always connect the PMS to the battery first before connecting it to the solar panel. This prevents damage caused by open-circuit voltage from the solar panel.

Renogy Support

To discuss inaccuracies or omissions in this quick guide or user manual, visit or contact us at:

contentservice@renogy.com

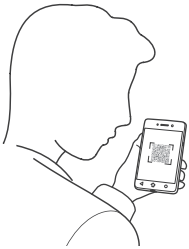

Questionnaire Investigation

To explore more possibilities of solar systems, visit Renogy Learning Center at:

G | renogy.com/learning-center

For technical questions about your product in the U.S., contact the Renogy technical support team through:

support@renogy.com

1(909)2877111

For technical support outside the U.S., visit the local website below:

Canada	ca.renogy.com
Australia	au.renogy.com
Spain	es.renogy.com
Germany	de.renogy.com
Netherlands	nl.renogy.com
Other Europe	eu.renogy.com
China	www.renogy.cn
Japan	jp.renogy.com
France	fr.renogy.com
Italy	it.renogy.com
United Kingdom	uk.renogy.com

Join Our Facebook Community Today. Scan the QR code to connect with like-minded people and Renogy engineers. You will get:

- Priority access to our latest launches & special events
- Insider Q&A sessions with our engineers
- Endless solar project ideas & sources

Warranty Statement

For full warranty terms and conditions, visit the warranty page of the RENOGY website at https://www.renogy.com/warranty.

Australia

RNG AU PTY LTD

3/11 David St, Dandenong VIC 3175

Tel: 1800 560 588

North America and Other Countries

RNG International Inc.

5050 S Archibald Ave, Ontario, CA 91762, USA

Tel: +1 (909) 287 7111

FCC

FCC Statement

This device complies with Part 15 of the FCC Rules. Operation is subject to the following two conditions:

(1) This device may not cause harmful interference.
(2) This device must accept any interference received, including interference that may cause undesired operation.

Any Changes or modifications not expressly approved by the party responsible for compliance could void the user's authority to operate the equipment.

This equipment has been tested and found to comply with the limits for a Class B digital device, pursuant to Part 15 of the FCC Rules. These limits are designed to provide reasonable protection against harmful interference in a residential installation. This equipment generates, uses and can radiate radio frequency energy and, if not installed and used in accordance with the instructions, may cause harmful interference to radio communications. However, there is no guarantee that interference will not occur in a particular installation. If this equipment does cause harmful interference to radio or television reception, which can be determined by turning the equipment off and on, the user is encouraged to try to correct the interference by one or more of the following measures:

(1) Reorient or relocate the receiving antenna.
(2) Increase the separation between the equipment and receiver.
(3) Connect the equipment into an outlet on a circuit different from that to which the receiver is connected.
(4) Consult the dealer or an experienced radio/TV technician for help.

FCC Radiation Exposure Statement

This equipment complies with FCC radiation exposure limits set forth for an uncontrolled environment. This equipment should be installed and operated with minimum distance 20cm between the radiator & your body.

Renogy Empowered

Renogy aims to empower people around the world through education and distribution of DIY-friendly renewable energy solutions.

We intend to be a driving force for sustainable living and energy independence.

In support of this effort, our range of solar products makes it possible for you to minimize your carbon footprint by reducing the need for grid power.

Live Sustainably with Renogy

Did you know? In a given month, a 1 kW solar energy system will...

- Save 170 pounds of coal from being burned
- Save 300 pounds of CO_2 from being released into the atmosphere
- Save 105 gallons of water from being consumed

Renogy Power PLUS

Renogy Power Plus allows you to stay in the loop with upcoming solar energy innovations, share your experiences with your solar energy journey, and connect with like-minded people who are changing the world in the Renogy Power Plus community.

@Renogy Solar @renogyofficial @Renogy

Renogy reserves the right to change the contents of this manual without notice.

Manufacturer: RENOGY New Energy Co.,Ltd
Address: Building 1A, No. 98, Huicheng Road, Chang'an Street, Huishan District, Wuxi, 214000

EC REP
eVatmaster Consulting GmbH
Raiffeisen Street2 B11,
63110 Rodgau, Hessen, Germany
contact@evatmaster.com

UK REP
EVATOST CONSULTING LTD
Office 101 32 Threadneedle Street,
London, United Kingdom, EC2R 8AY
contact@evatost.com