ENGLISH

Manual - BMV-712 Smart

Battery monitor

Rev 20 - 10/2026

This manual is also available in HTML5.

Table of Contents

1. Safety precautions **1**
1.1. General safety precautions 1
1.2. Battery safety warnings 1
1.3. Transport and storage 1

2. Introduction **2**
2.1. The battery monitor 2
2.2. Why should I monitor my battery? 2
2.3. Sizing 2
2.4. The VictronConnect app 2
2.5. Accessories 3

3. Installation **4**
3.1. What's in the box? 4
3.2. Mounting the shunt 4
3.3. Mounting the head unit 5
3.4. Connections overview 7
3.5. Basic electrical connections 7
3.6. Auxiliary electrical connections 8
3.6.1. Auxiliary connection for monitoring the voltage of a second battery 8
3.6.2. Auxiliary connection midpoint battery bank monitoring 8
3.6.3. Auxiliary connection for temperature monitoring 9
3.7. Programmable relay 9
3.8. Use of alternative shunts 10
3.9. GX device connection 10
3.10. Wiring for use as DC meter 11

4. Configuration **12**
4.1. Setup wizard 12
4.2. Automatic voltage detection 12
4.3. How to change settings 13
4.3.1. Settings via the head unit 13
4.3.2. The VictronConnect app 14
4.4. Update firmware 15
4.5. Make essential settings 15
4.5.1. Set the battery capacity value 15
4.5.2. Set charged voltage value 15
4.5.3. Set state of charge 16
4.5.4. Set the auxiliary input function 16
4.6. Make Lithium settings (if needed) 16
4.7. Configure for use as DC meter 17

5. Operation **18**
5.1. How does the battery monitor work? 18
5.2. Readout overview 18
5.3. Using the head unit menus 19
5.4. Trends 19
5.5. History 20
5.5.1. Accessing historical data via the VictronConnect app 20
5.5.2. Accessing historical data via the head unit 21
5.5.3. History data 22
5.6. Alarms 22
5.7. Synchronising the battery monitor 23
5.7.1. Automatic synchronisation 23
5.7.2. Manual synchronisation 24
5.8. Operation as a DC meter 24

6. Interfacing **25**
6.1. VictronConnect app via USB 25
6.2. Connecting to a GX device and the VRM portal 25
6.3. Connecting to VE.Smart networking 26
6.4. Custom integration 27

7. All features and settings 28
7.1. How to change settings 28
7.1.1. Accessing settings via the head unit 28
7.1.2. Accessing settings via the VictronConnect app 28
7.1.3. Saving, loading and sharing settings in VictronConnect 28
7.2. Battery settings 28
7.2.1. Battery capacity 28
7.2.2. Charged voltage 29
7.2.3. Discharge floor 29
7.2.4. Tail current 29
7.2.5. Charged detection time 29
7.2.6. Peukert exponent 30
7.2.7. Charge efficiency factor 30
7.2.8. Current threshold 30
7.2.9. Time-to-go averaging period 30
7.2.10. Battery SOC on reset 30
7.2.11. State of charge 31
7.2.12. Synchronise SoC to 100% 31
7.2.13. Zero current calibration 31
7.3. Relay settings 32
7.3.1. Relay mode 32
7.3.2. Invert relay 32
7.3.3. Relay state 32
7.3.4. Relay minimum closed time 32
7.3.5. Relay off delay 33
7.3.6. Low State of Charge (SoC) relay 33
7.3.7. Low voltage relay 33
7.3.8. High voltage relay 33
7.3.9. Low starter voltage relay 33
7.3.10. High starter voltage relay 34
7.3.11. Low temperature relay 34
7.3.12. Mid voltage relay 34
7.4. Alarm settings 34
7.4.1. Alarm buzzer 34
7.4.2. Low SoC alarm settings 35
7.4.3. Low voltage alarm 35
7.4.4. High voltage alarm 35
7.4.5. Low starter voltage alarm 35
7.4.6. High starter voltage alarm 36
7.4.7. High temperature alarm 36
7.4.8. Low temperature alarm 36
7.4.9. Midpoint deviation alarm 36
7.5. Display settings 36
7.5.1. Backlight intensity 36
7.5.2. Backlight always on 36
7.5.3. Scroll speed 37
7.5.4. Main voltage display 37
7.5.5. Current display 37
7.5.6. Power display 37
7.5.7. Consumed Ah display 37
7.5.8. State of charge display 37
7.5.9. Time-to-go display 37
7.5.10. Starter voltage display 38
7.5.11. Temperature display 38
7.5.12. Mid-voltage display 38
7.6. Miscellaneous settings 39
7.6.1. Software version 39
7.6.2. Restore defaults 39
7.6.3. Clear history 39
7.6.4. Lock setup 39
7.6.5. Shunt current 40
7.6.6. Shunt voltage 40
7.6.7. Temperature unit 40
7.6.8. Temperature coefficient 40
7.6.9. Aux input 40
7.6.10. Battery starts synchronised 40
7.6.11. Bluetooth mode 41
7.6.12. Monitor Mode 41
7.6.13. Current measurement direction 41
7.7. Additional settings 41

7.7.1. Reset history 42
7.7.2. Reset PIN code 42
7.7.3. Temperature unit setting 42
7.7.4. Serial number 42
7.7.5. Disabling and re-enabling Bluetooth 42
7.7.6. Changing PIN code 43
7.7.7. Custom name 43
7.7.8. Firmware 43
7.7.9. Reset to defaults 43

8. Battery capacity and Peukert exponent 44

9. Midpoint voltage monitoring 46

9.1. Battery bank and midpoint wiring diagrams 46
9.1.1. Connecting and monitoring midpoint in a 24V battery bank 46
9.1.2. Connecting and monitoring midpoint in a 48V battery bank 47
9.2. Midpoint deviation calculation 48
9.3. Setting the alarm level 48
9.4. Alarm delay 48
9.5. What to do in case of an alarm during charging 48
9.6. What to do in case of an alarm during discharging 49
9.7. The Battery Balancer 49

10. Troubleshooting 50

10.1. Functionality issues 50
10.1.1. Unit is dead 50
10.1.2. Auxiliary port not working 50
10.1.3. Unable to change VictronConnect settings 50
10.2. Connection issues 50
10.2.1. Cannot connect via Bluetooth 50
10.2.2. PIN code lost 51
10.3. Incorrect readings 51
10.3.1. Charge and discharge current are inverted 51
10.3.2. Incomplete current reading 51
10.3.3. There is a current reading while no current flows 51
10.3.4. Incorrect state of charge reading 52
10.3.5. State of charge is missing 52
10.3.6. State of charge does not reach 100% 52
10.3.7. State of charge always shows 100% 53
10.3.8. State of charge does not increase fast enough or too fast when charging 53
10.3.9. Incorrect battery voltage reading 53
10.3.10. Incorrect auxillary battery voltage reading 53
10.3.11. Synchronisation issues 53

11. Technical data 54

11.1. Technical data 54

12. Appendix 55

12.1. Dimensions BMV head unit 55
12.2. Dimensions shunt 56

1. Safety precautions

1.1. General safety precautions

Read this manual carefully. It contains important instructions that must be followed during installation, operation and maintenance.

Save these instructions for future reference on operation and maintenance.

1.2. Battery safety warnings

Working in the vicinity of a lead acid battery is dangerous. Batteries can generate explosive gases during operation. Never smoke or allow a spark or flame in the vicinity of a battery. Provide sufficient ventilation around the battery.

Wear eye and clothing protection. Avoid touching eyes while working near batteries. Wash your hands when done.

If battery acid contacts skin or clothing, wash them immediately with soap and water. If acid enters an eye, immediately flood the eye with running cold water for at least 15 minutes and get medical attention immediately.

Be careful when using metal tools in the vicinity of batteries. Dropping a metal tool onto a battery might cause a short circuit and possibly an explosion.

Remove personal metal items such as rings, bracelets, necklaces, and watches when working with a battery. A battery can produce a short circuit current high enough to melt objects such as rings, causing severe burns.

1.3. Transport and storage

Store this product in a dry environment.

Store this product in temperatures between -40°C and +60°C.

2. Introduction

2.1. The battery monitor

The BMV-712 Smart is a battery monitor. It measures battery voltage and current. Based on these measurements, it calculates the battery's state of charge and the time to go. It also keeps track of historical data, such as deepest discharge, average discharge and the number of charge and discharge cycles.

All monitored battery parameters can be read out, and settings can be changed via the display and the four buttons.

A connection with the VictronConnect app is possible via Bluetooth or USB. The VictronConnect app can be used to read out all monitored battery parameters or to change settings. To connect via USB, an optional VE.Direct to USB interface is needed.

If the battery monitor is connected to a GX device, such as the Cerbo GX or the ColorControl GX, the battery can be monitored locally with the GX device or remotely via the VRM portal.

The auxiliary input can be used to monitor the voltage of a second battery or the midpoint of a battery bank. The auxiliary input can also be used for battery temperature monitoring, together with the optional Temperature sensor for BMV.

When connected to other Victron products via VE.Smart networking, the battery monitor can provide real-time battery data such as battery temperature, voltage and current via Bluetooth for use by Victron solar chargers and select AC chargers.

2.2. Why should I monitor my battery?

Batteries are used in a wide variety of applications, mostly to store energy for later use. But how much energy is stored in the battery? No one can tell by just looking at it. The service life of batteries depends on many factors. Battery life may be shortened by under-charging, over-charging, excessively deep discharges, excessive charge or discharge currents, and by high ambient temperature. Monitoring the battery with a battery monitor will give important feedback to the user so that remedial measures can be taken when necessary. Doing this will extend battery life and the battery monitor will quickly pay for itself.

2.3. Sizing

The battery monitor is available in one size; it has a 500A shunt. However, it is possible to use the battery monitor with larger shunts all the way up to 9999A. Larger shunts are not included. For 1000A, 2000A or 6000A shunts see the Shunt product page.

2.4. The VictronConnect app

The VictronConnect app can be used to monitor and configure the battery monitor. Note that configuring the battery monitor using the VictronConnect app is easier than configuring using the battery monitor head unit.

The VictronConnect app can connect to the battery monitor via:

- Bluetooth.
- USB, using the optional VE.Direct to USB interface.
- Remotely via a GX device and the VRM portal.

The VictronConnect app is available for the following platforms:

- Android.
- Apple iOS (Note that USB is not supported, it is only possible to connect via Bluetooth).
- macOs.
- Windows (Note that Bluetooth is not supported, it is only possible to connect via USB).

The VictronConnect app can be downloaded from app stores or from the VictronConnect product page or scan the below QR code.

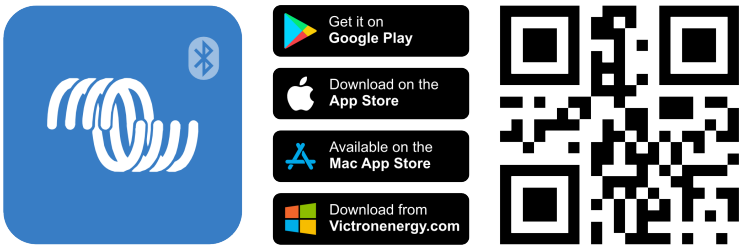

2.5. Accessories

These optional parts might be needed depending on your setup:

- Temperature sensor for BMV - to measure the battery temperature.
- GX Device, such as a Cerbo GX - for system and/or remote monitoring.
- VE.Direct cable - to connect the battery monitor to a GX device.
- VE.Direct to USB interface - to connect to the battery monitor via USB to a GX device or to the VictronConnect app.
- Wall mount enclosure for BMV or MPPT Control - use in case panel mounting of the battery monitor head unit is not possible.
- Wall mount enclosure for BMV and Color Control GX - use to wall mount the battery monitor head unit together with a Color Control GX in the same enclosure.
- RJ12 UTP cable - use in case the supplied 10m (32ft) RJ12 cable (the cable between the shunt and the head unit) is too long or too short. These cables are available in a variety of lengths of 30cm up to 30 meters (1ft up to 98ft).

3. Installation

3.1. What's in the box?

BMV-712 Smart head unit together with attachment sleeve.	
500A shunt.	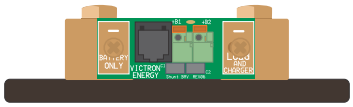
Two 1.5m (59") red cables with a 1A fuse.	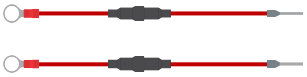
10m (33ft) RJ12 UTP cable.	
Square face plate together with an attachment flange.	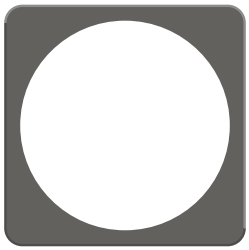
Bag with 4 small screws.	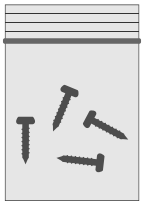
Quick installation guide.	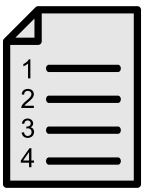
Spare serial number sticker.	

3.2. Mounting the shunt

The shunt has an IP21 rating; this means that the shunt is not waterproof and has to be mounted in a dry location.

The shunt has two 5.5 mm holes for mounting purposes; these are located in the base of the shunt. The holes can be used to screw or bolt the shunt onto a hard surface (note that these screws are not included).

For the exact location of the mounting holes see the dimension drawing [56] in the appendix of this manual.

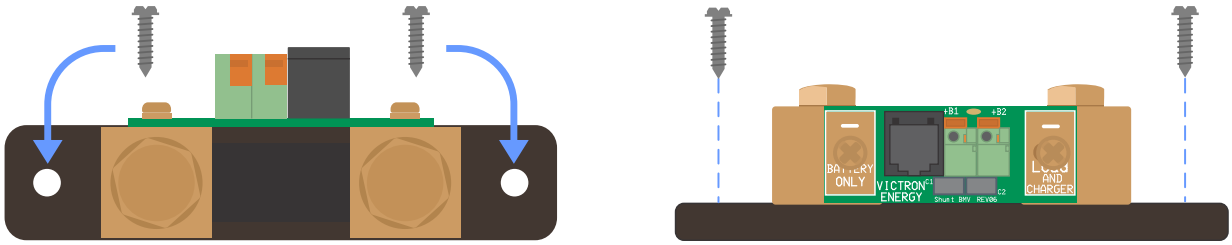

Top view shunt indicating mounting holes and side view shunt indicating the mounting method.

3.3. Mounting the head unit

The head unit can be mounted in a variety of ways:

A. Panel mounting, the head unit is secured at the back of a panel.

B. Panel mounting, the head unit is secured at the front of the panel.

C. Wall mounting, using an optional wall mounting enclosure.

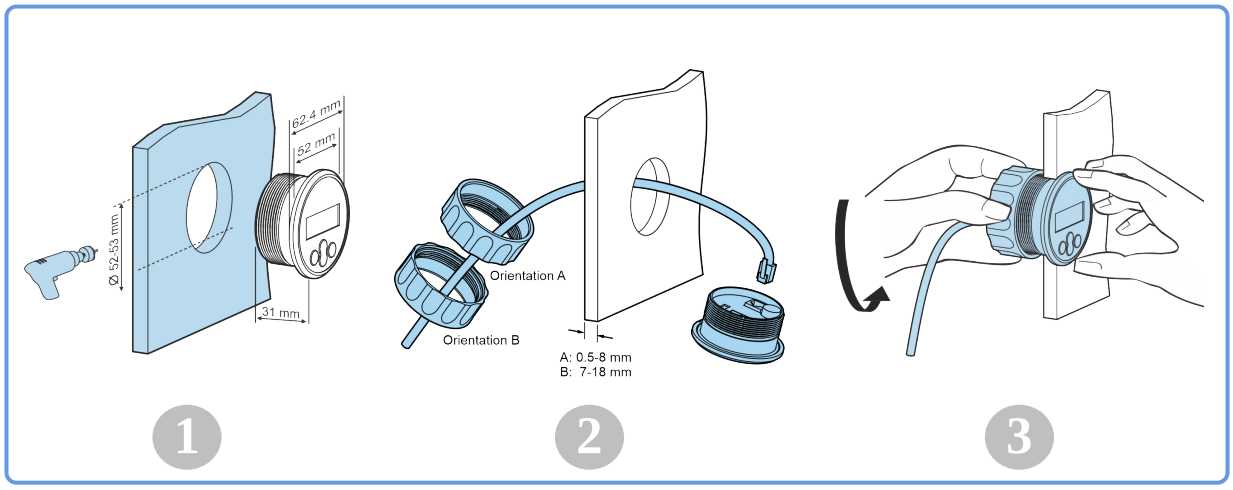

Mounting method A.

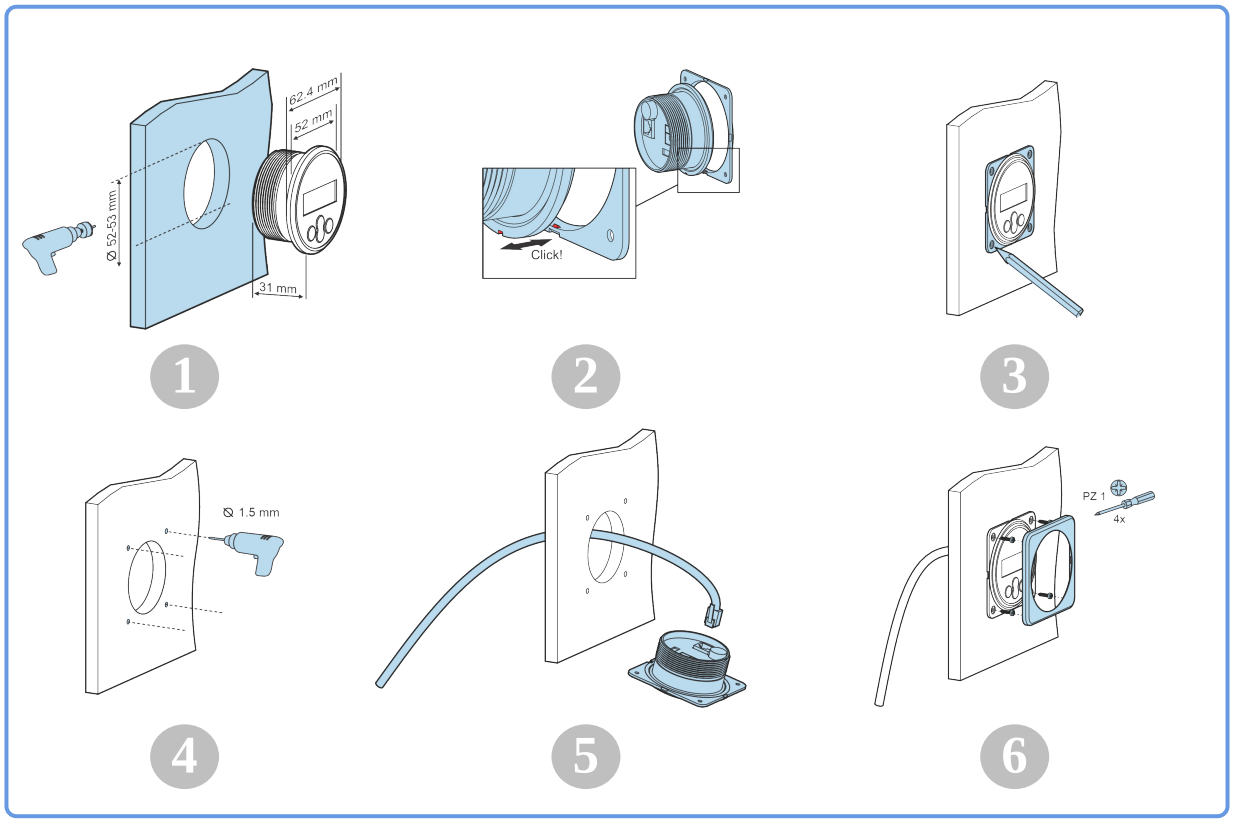

Mounting method B.

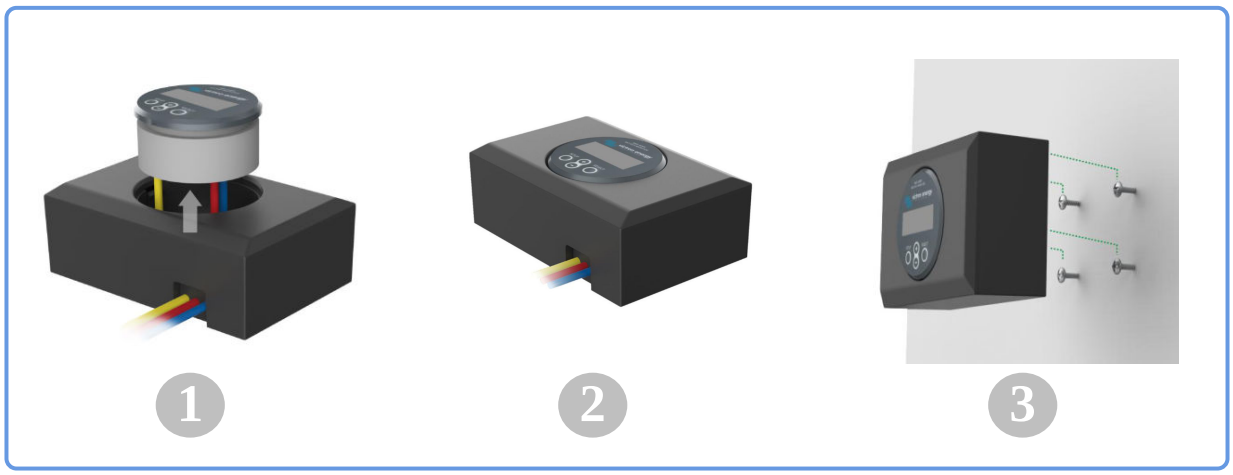

Mounting method C.

For the full wall mounting instructions, see the wall mounting installation manuals on the Wall mount enclosure for BMV or MPPT Control or Wall mount enclosure for BMV and Color Control GX product pages.

3.4. Connections overview

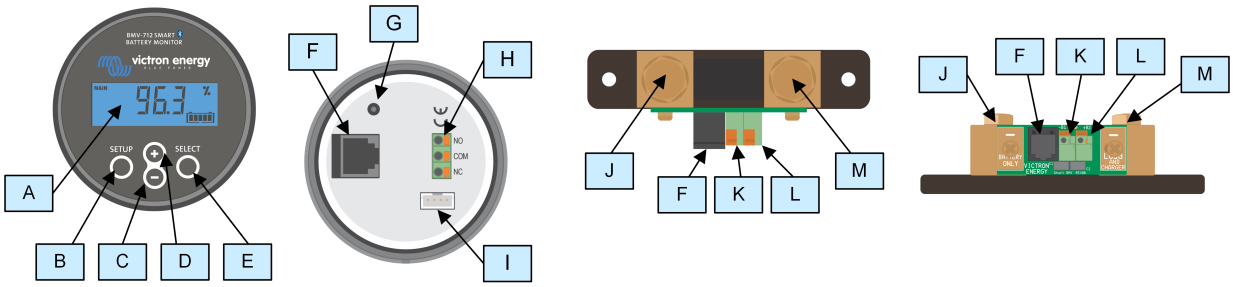

#	Name	Terminal type
A	Display	-
B	Setup button	-
C	Down button	-
D	Up button	-
E	Select button	-
F	RJ12 connector	RJ2 terminal
G	Buzzer	-
H	Programmable relay connector	Push connector
I	VE.Direct connector	VE.Direct terminal
J	Negative battery connection	M10 bolt
K	Positive battery connection	M10 ring terminal
L	Auxilary connection	Push connector
M	Negative load connection	M10 bolt

3.5. Basic electrical connections

Connection procedure:

1. Connect the negative battery terminal to the M10 bolt on the "BATTERY ONLY" side of the shunt. Tighten the shunt bolt with a maximum torque of 21Nm (300A model: 10Nm).

   Note that there should be no other connections on this side of the shunt or on the negative battery terminal. Any loads or chargers connected here will be excluded from the battery state of charge calculation.

2. Connect the negative of the electrical system to the M10 bolt on the "LOAD AND CHARGER" side of the shunt. Tighten the shunt bolt with a maximum torque of 21Nm (300A model: 10Nm). Make sure that the negative of all DC loads, inverters, battery chargers, solar chargers and other charge sources are connected “after” the shunt.

3. Connect the ferrule pin of the red cable with the fuse to the shunt by pushing the pin into to the “+B1” terminal.

4. Connect the M10 eye terminal of the red cable with the fuse to the positive terminal of the battery.

5. Connect the shunt to the head unit using the RJ12 cable. Plug one side of the RJ12 cable into the shunt RJ12 terminal and the other side of the cable into the RJ12 terminal on the rear of the head unit.

The battery monitor is now powered up. The display is active, and Bluetooth is active.

In order to be fully functional, the battery monitor needs to be configured; see the Configuration [12] chapter.

In case the battery monitor is going to be used to monitor a second battery, battery bank midpoint or battery temperature, see one of the next 3 paragraphs on how to do this and then go to the Configuration [12] chapter.

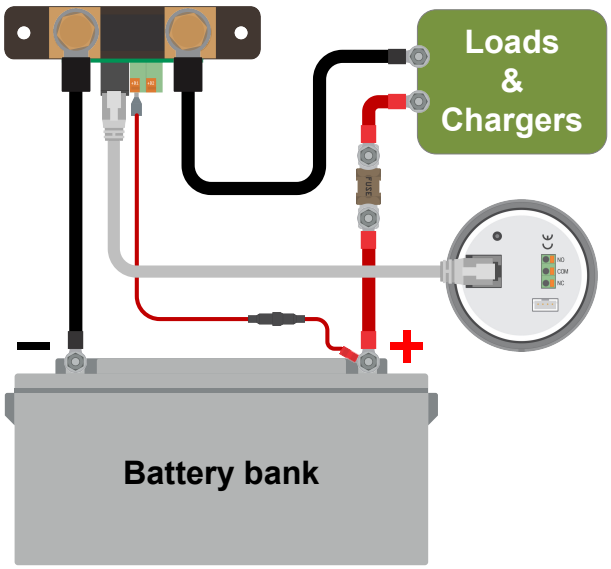

Basic battery monitor installation.

3.6. Auxiliary electrical connections

In addition to the comprehensive monitoring of the main battery bank, a second parameter can be monitored. This can be one of the following:

- The voltage of a second battery, like a starter battery.
- The midpoint deviation of the battery bank.
- Battery temperature.

This chapter describes how to wire the +B2 terminal for the three above options.

3.6.1. Auxiliary connection for monitoring the voltage of a second battery

For use to monitor the voltage of a second battery, such as a starter or auxiliary battery.

Connection procedure:

1. Verify that the negative pole of the second battery is connected to the LOAD AND CHARGER side of the shunt.
2. Connect the ferrule pin of the second red cable with fuse to the shunt by pushing the pin into to the +B2 terminal.
3. Connect the M10 lug of the second red cable with fuse to the positive terminal of the second battery.

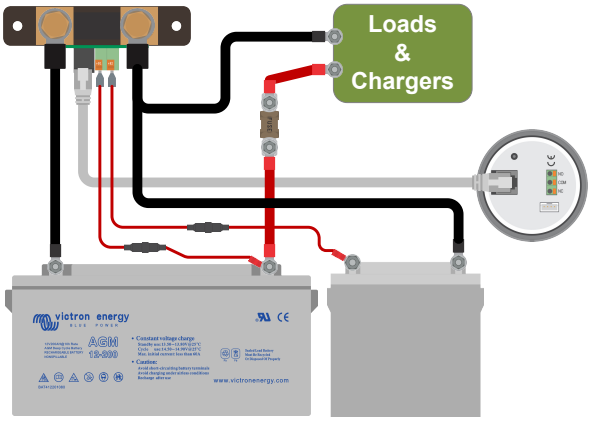

Battery monitor with auxiliary second battery monitoring.

3.6.2. Auxiliary connection midpoint battery bank monitoring

For use with a battery bank that consists of multiple batteries that are wired in series or series/parallel to create a 24V or 48V battery bank.

Connection procedure:

1. Connect the ferrule pin of the second red cable with fuse to the shunt by pushing the pin into to the +B2 terminal.
2. Connect the M10 lug of the second red cable with fuse to the positive terminal of the midpoint.

For more information on midpoint monitoring and for additional diagrams on midpoint battery bank wiring see the Midpoint voltage monitoring [46] chapter.

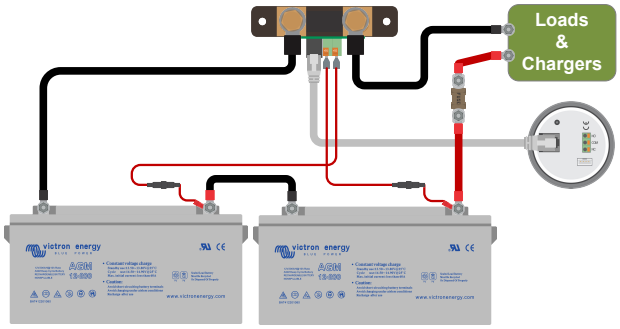

Battery monitor with auxiliary midpoint monitoring.

3.6.3. Auxiliary connection for temperature monitoring

For use to monitor the temperature of a battery via the (not included) Temperature sensor for BMV-712 Smart and BMV-702 . This temperature sensor needs to be purchased separately. Be aware that this is a different temperature sensor than the temperature sensors that are included with Victron inverter/chargers and some battery chargers.

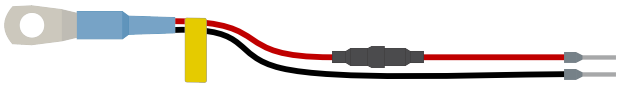

Temperature sensor for the battery monitor

Connection procedure:

- Connect the ferrule pin of the black temperature sensor wire by pushing the ferule pin into the +B2 terminal.
- Connect the ferrule pin of the red wire cable by pushing the ferule pin into to the +B1 terminal.
- Connect the M10 cable lug of the temperature sensor to the positive battery terminal.

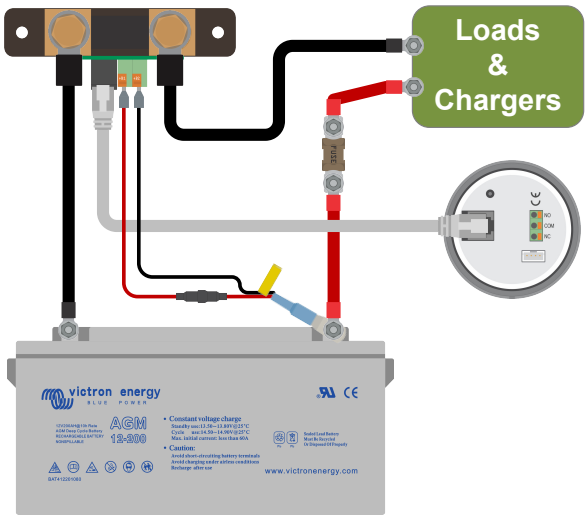

Battery monitor with auxiliary temperature sensing.

> Note that if the temperature sensor is used, the two red cables with fuse that came with the battery monitor are not needed. The temperature sensor will replace these cables.

3.7. Programmable relay

The battery monitor is equipped with a programable relay. This relay can be used as an alarm relay, to start a generator or for other applications. For more information on the various relay modes and how to configure the relay, see chapter Relay settings [32].

A usage example of the relay is to start a generator when the battery state of charge has dropped too low, and then to stop the generator when the batteries have been recharged.

By default, the relay is set to energise when the battery state of charge falls below 50% and to de-energise when the battery state of charge has risen to 90%. However, the relay can be configured to also trigger on other conditions, like battery voltage.

The relay has 3 contacts: COM (common), NO (normally open), and NC (normally closed) and are located on the back of the head unit.

When the relay contact is open, the coil is de-energised; there is no contact between COM and NO. When the relay is energised, the relay closes, and contact between COM and NO is made. The relay function can be inverted: de-energised becomes energised and vice versa. See setting Invert relay [32].

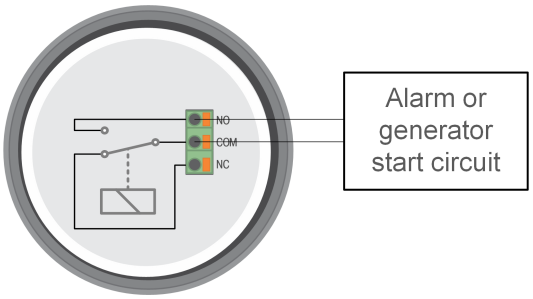

The internal wiring diagram of the battery monitor with the relay in a de-energised state connected to an external alarm or generator start circuit.

3.8. Use of alternative shunts

The battery monitor is supplied with a 500A, 50mV shunt. This shunt is suitable for most applications. However, a larger shunt will be required if system currents above 500A are expected.

The battery monitor can be configured to work with a wide range of different shunts. Shunts of up to 9999A and up to 75mV can be used. For a selection of larger shunts, i.e. 1000A, 2000A or 6000A, see our shunt product page.

When using a shunt other than the one supplied with the battery monitor, please proceed as follows:

1. Unscrew the circuit board from the shunt.
2. Mount the circuit board on the new shunt, and ensure that there is good electrical contact between the circuit board and the shunt.
3. Connect the new shunt to the electrical system and battery monitor head unit as shown in chapter Basic electrical connections [7]. Pay special attention to the orientation of the shunt circuit board in relation to the battery and load connections.
4. Follow the setup wizard; see the Setup wizard [12] chapter.
5. After completing the setup wizard, set the proper shunt current and shunt voltage according to the Shunt current [40] and the Shunt voltage [40] settings.
6. If the battery monitor reads a non-zero current, even when there is no load, and the battery is not being charged, calibrate the zero current reading using the Zero current calibration [31] setting.

3.9. GX device connection

If the system contains a GX device such as a Cerbo GX, the battery monitor can be connected to the GX device using a VE.Direct cable or a VE.Direct to USB interface.

Once connected, the GX device can be used to read out all monitored battery parameters. For more information see chapter Connecting to a GX device and the VRM portal [25].

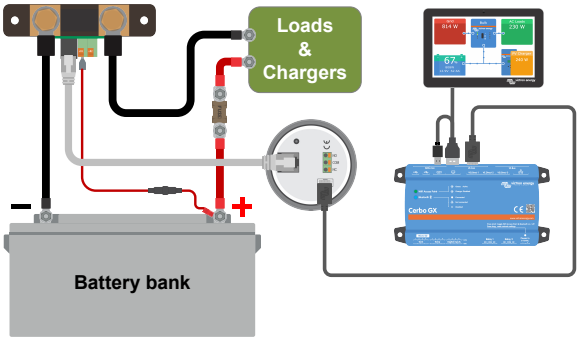

The battery monitor is connected to a Cerbo GX and a GX Touch screen.

3.10. Wiring for use as DC meter

When using the battery monitor as a DC meter, wire it to the device or circuit that needs to be monitored.

> Note that the battery monitor also needs to be configured as a DC monitor using the VictronConnect app before it will operate as a DC monitor. See the Configure for use as DC meter [17] chapter.

It is also possible to have a main battery monitor in the system together with a separate battery monitor that has been set up as a DC meter to monitor a specific device or circuit.

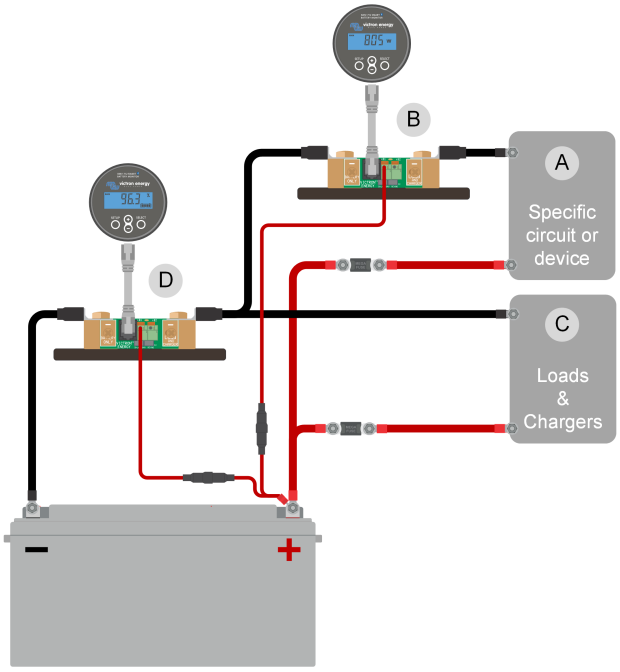

Wiring example of a system containing a main battery monitor, together with a battery monitor that has been set up as a DC meter and is monitoring a specific device or circuit. One battery monitor is used as a DC meter (B) and the other battery monitor is used as a battery monitor (D).

#	Description
A	Specific DC device or DC circuit
B	Battery monitor used as DC meter
C	The rest of the DC circuit
D	Battery monitor used as battery monitor

4. Configuration

Once the electrical connections have been made, and the battery monitor has been powered up, it needs to be configured to be suitable for the system it is used in.

This can be done with the buttons on the battery monitor head unit or even easier via the VictronConnect app.

This chapter describes how to configure the battery monitor by making the basic settings. See the All features and settings [28] chapter for all settings and features.

4.1. Setup wizard

The battery monitor will automatically start the setup wizard on the first power-up or after a factory reset. The setup wizard must be completed before any other settings are made.

Alternatively, use the VictronConnect app to configure the battery monitor. This will override the setup wizard.

1. The display shows the scrolling text "battery capacity": battery capacity .
2. Press any button to enter the setup wizard. The scrolling text will stop, and the factory default battery capacity value 0200 Ah (200 Ah) will be shown with the first digit blinking.
3. Use the + and – buttons to set the first digit of the battery capacity value. Preferably use the 20-hour (C20) battery capacity rating. For more information on battery capacity, see the Battery capacity and Peukert exponent [44] chapter.
4. Press SELECT to set the next digit in the same manner. Repeat this step until the required battery capacity is displayed.
5. Press SELECT to store the value. A short beep confirms this.

   Should a correction need to be made, press SELECT again and repeat the previous steps.
6. Press SETUP, + or – to proceed to the auxiliary input setting.
7. The display will show the scrolling text AUXILIARY INPUT (auxiliary input).
8. Press SELECT to stop scrolling, and the LCD will show: START (start).
9. Use the + or – buttons to select the required function of the auxiliary input: START (start) for monitoring the starter battery voltage. MID (mid) for monitoring the midpoint voltage of a battery bank. TEMP (temp) for using the optional temperature sensor.
10. Press SELECT to store the value. A short beep confirms this.

    Should a correction need to be made, press SELECT again and repeat the previous step.
11. Press the SETUP, + or – button to end the setup wizard and switch to the normal operating mode.

Immediately after the completion of the setup wizard, the battery monitor will automatically detect the nominal voltage of the battery system. For details and limitations of automatic voltage detection, see the next chapter Automatic voltage detection [12].

The battery monitor is now ready for use. It is now set up for an average system with GEL, AGM or flooded lead-acid batteries. Further battery monitor configurations are required if your system contains a battery with different chemistry, like lithium, or if other specific system settings are needed. See the All features and settings [28] chapter.

> If the setup wizard is not showing, i.e. there is no scrolling text, it can be re-activated by performing a battery monitor reset. To do this: simultaneously press the SETUP and the SELECT button for 3 seconds. This resets the battery monitor to its factory settings.
>
> Note that factory settings can only be restored if the Lock setup [39] setting has been set to OFF.

4.2. Automatic voltage detection

The battery monitor will automatically adjust itself to the nominal voltage of the battery bank. This happens immediately after the completion of the setup wizard. The below table shows how the nominal voltage is determined and to what nominal battery voltage the battery monitor is automatically set. See the Set charged voltage value [15] chapter for more information.

Measured voltage	Assumed nominal voltage
< 18V	12V
18 - 36V	24V

Measured voltage	Assumed nominal voltage
> 36V	48V

Note that the battery monitor is unable to detect a 32V nominal battery voltage. If the battery monitor is used with a 32V battery bank, the charged voltage must be set manually using the Charged voltage [29] setting.

4.3. How to change settings

4.3.1. Settings via the head unit

Use the display buttons to enter and navigate through the settings menu. Each setting has a number and a name. For example: "01 - Battery capacity". The full list of all battery settings and their corresponding number can be found in the All features and settings [28] chapter.

It is also possible (and easier) to make the battery monitor settings via the VictronConnect app. See the The VictronConnect app [14] chapter on how to do this.

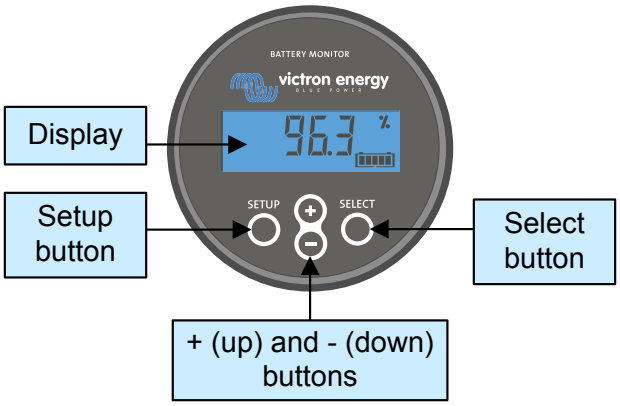

BMV head unit display and buttons.

To access the settings menu and change settings:

1	Start in the main menu.	
2	Press SETUP for two seconds to enter the settings menu.	
3	The first setting item 01-Battery capacity will be shown.	
4	Use the + and – buttons to go to the desired setting item.	
5	Press SELECT to access the setting item.	
6	Use SELECT and the + and – buttons to customize the setting.	

7	Press SETUP to return to the setting menu.	
8	Go to the next setting using the + or - buttons.	
9	After all settings have been made, press SETUP to return from the settings menu to normal mode.	

4.3.2. The VictronConnect app

The VictronConnect app can be used to change all settings and to update the firmware.

Ways to connect to the battery monitor:

- Locally via built-in Bluetooth.
- Locally via USB using the VE.Direct to USB interface connected to the VE.Direct port.
- Remotely via a GX device, using VictronConnect "Remote" feature. For more information, see the VictronConnect-Remote chapter in the VictronConnect app manual.

How to connect with the VictronConnect app to the battery monitor:

- Ensure that the battery monitor is powered.
- Download and install the VictronConnect app from the App Store or Google Play Store.
- Open the VictronConnect app and tap on the battery monitor in the device list.
- In case of a connection via Bluetooth, a pairing dialog will appear, prompting you to enter the PIN code. The unique PIN code is printed on the serial number sticker. If there is no PIN code on the sticker, use the default PIN code 000000. To prevent unauthorized connections, it is strongly advised to change the default PIN code to one of your own choice when prompted. This can be done in the product info tab; see Changing PIN code [43].

To view and/or change battery monitor settings, navigate to the settings page by clicking on the cog icon ⚙ at the top right of the home screen.

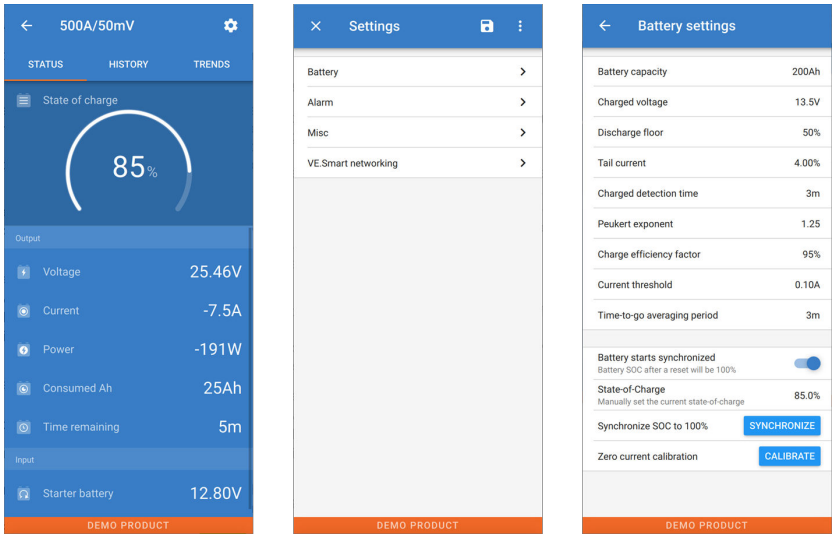

The battery monitor monitoring and setting screens in the VictronConnect app.

Note that this manual only covers the items that are specific to the battery monitor. For more general information about the VictronConnect app, like how to use it and where to download it, or how to connect, see the VictronConnect app product page and manual.

4.4. Update firmware

On a new install, it is recommended to update the firmware of the battery monitor. If there is a newer firmware version available, the VictronConnect app will notify you of this as soon as a connection with the battery monitor is made.

> Note that the firmware can only be updated via the VictronConnect app. The app needs to be up to date to be able to access the latest firmware.

To check if the firmware is up to date or to manually update firmware, connect to the battery monitor using the VictronConnect app and follow the below steps:

- Navigate to the product settings by clicking the "cog" ⚙ symbol in the top right-hand corner of the product status screen.
- Click on the "3 dots" ⋮ symbol in the top right-hand corner of the settings screen.
- Select "Product info" from the pop-up menu.
- The firmware version will be displayed. It is mentioned if this is the latest firmware version (or not). If a newer firmware version is available, an "UPDATE" button will be displayed.
- To update the firmware, press the "UPDATE" button.

4.5. Make essential settings

The default settings of the battery monitor are tailored for lead acid batteries, like AGM, GEL, OPzV or OPzS batteries.

Most settings can stay at their factory default. But there are a few settings that need to be changed. These are:

- Battery capacity.
- Charged voltage.
- The functionality of the auxiliary input (if used).
- State of charge or start synchronised.

> If lithium batteries (or batteries with a different chemistry) are used, some additional settings will have to be changed.
>
> First, make the essential settings as described in this paragraph and then refer to the next paragraph for the special lithium settings.

> For more information about these and any of the other settings, see chapter All features and settings [28].

4.5.1. Set the battery capacity value

In the VictronConnect app, see: **Settings > Battery**.

Via the head unit, see: **Setup menu > Setting 01 - Battery capacity**.

The battery monitor is by default set to 200Ah. Change this value to match your battery capacity. For lead-acid batteries, we recommend entering the 20-hour (C20) rate.

4.5.2. Set charged voltage value

In the VictronConnect app, see: **Settings > Battery > Charged voltage**.

Via the head unit, see: **Setup menu > Setting 02 - Charged voltage**.

Although the battery monitor automatically detects the voltage, it is good practice to check if this setting is correctly set.

Nominal battery voltage	Recommended charged voltage setting	
	Lithium	**Lead-acid**
12V	13.9 V	14.0 V
24V	27.8 V	28.0 V
36V	41.7 V	42.0 V

Nominal battery voltage	Recommended charged voltage setting	
48V	55.6 V	56.0 V

For more information, also see the Charged voltage [29] chapter.

4.5.3. Set state of charge

In the VictronConnect app, see: **Settings > Battery > Battery start synchronized**.

Via the head unit, see: **Setup menu > Setting 70 - Start synchronised**.

When set to ON, the battery monitor will consider itself synchronized when powered up, resulting in a state of charge of 100%. If set to OFF, the battery monitor will consider itself un-synchronized when powered up, resulting in a state of charge that is unknown until the first actual synchronization.

For VictronConnect only: The initial state of charge value can also be manually set, by default, this is 100%, and can be set to a different value if so desired. See: **Settings > Battery > State-of-charge**.

4.5.4. Set the auxiliary input function

In the VictronConnect app, see: **Settings > Misc > Aux input**.

Via the display, see: **Settings menu > Setting 69 - Aux input**.

This setting sets the function of the auxiliary input, being:

- **Starter battery** - Voltage monitoring of a second battery.
- **Midpoint** - Measuring the midpoint of a battery bank.
- **Temperature** - Measuring battery temperature via an optional temperature sensor.
- **None** - The auxiliary input is not used.

4.6. Make Lithium settings (if needed)

LiFePO4 (Lithium Iron Phosphate or LFP) is the most used Li-ion battery chemistry. The factory defaults are in general also applicable to LFP batteries with exception of these settings:

- Charged voltage.
- Tail current.
- Peukert exponent.
- Charge efficiency.
- Discharge floor.

Charged voltage

In VictronConnect see: **Settings > Battery > Charged voltage**.

Via the head unit, see: **Setup menu > Setting 02 - Charged voltage**.

Set the charged voltage at 13.9V for a 12V system, 27.8V for a 24V system, 41.7V for a 36V system or 55.6V for a 48V system.

Tail current

In VictronConnect see: **Settings > Battery > Tail current**.

Via the head unit, see: **Setup menu > Setting 03 - Tail current**.

Some lithium battery chargers stop charging when the current drops below a set threshold. The tail current must be set higher in this case.

Peukert exponent

In VictronConnect see: **Settings > Battery > Peukert exponent**.

Via the head unit, see: **Setup menu > Setting 05 - Peukert exponent**.

When subjected to high discharge rates, lithium batteries perform much better than lead-acid batteries. Set the Peukert exponent at 1.01, unless the battery supplier advises otherwise.

Charge efficiency

In VictronConnect see: **Settings > Battery > Charge efficiency factor**.

Via the head unit, see: **Setup menu > Setting 06 - Charge efficiency factor**.

The charge efficiency of lithium batteries is much higher than that of lead-acid batteries. We recommend setting the charge efficiency at 98%.

Discharge floor

In VictronConnect see: **Settings > Battery > Discharge floor**.

Via the head unit, see: **Setup menu > Setting 16 - SoC relay**.

This setting is used in “the time to go” calculation and is set at 50% by default for lead-acid batteries. However, lithium batteries usually can be discharged significantly deeper than 50%. The discharge floor can be set to a value between 10 and 20%, unless the battery supplier advises otherwise.

Important warning

Lithium batteries are expensive and can be irreparably damaged due to very deep discharge or overcharge. Damage due to deep discharge can occur if small loads slowly discharge the battery when the system is not in use. Some examples of these loads are alarm systems, standby currents of DC loads and back current drain of battery chargers or charge regulators.

A residual discharge current is especially dangerous if the system has been discharged all the way until a low cell voltage shutdown has occurred. At this moment the state of charge can be as low as 1%. The lithium battery will get damaged if any remaining current is drawn from the battery. This damage can be irreversible.

A residual current of 1mA for example can damage a 100Ah battery if the battery has been left in a discharged state for more than 40 days (1mA x 24h x 40 days = 0.96Ah).

The battery monitor draws <12mA from the battery. The positive supply must therefore be interrupted if a system with Li-ion batteries is left unattended during a period long enough for the battery monitor power consumption to completely discharge the battery.

In case of any doubt about the possible residual current draw, isolate the battery by opening the battery switch, by pulling the battery fuse(s) or by disconnecting the battery positive when the system is not in use.

4.7. Configure for use as DC meter

In the VictronConnect battery monitor settings, go to the "Misc" settings and select "DC energy meter" from the Monitor mode drop-down menu. Once selected, you can choose what application the DC energy meter is used in.

Alternatively, navigate to setting 72 on the head unit.

For additional information also see the Monitor Mode [41] chapter.

5. Operation

5.1. How does the battery monitor work?

The main function of the battery monitor is to follow and indicate the state of charge of a battery, to be able to know how much charge the battery contains and to prevent an unexpected total discharge.

The battery monitor continuously measures the current flow in and out of the battery. Integration of this current over time, if it was a fixed current, boils down to multiplying current and time and gives the net amount of Ah added or removed.

For example, a discharge current of 10A for 2 hours will take 10 x 2 = 20Ah from the battery.

To complicate matters, the effective capacity of a battery depends on the rate of discharge, the Peukert efficiency, and, to a lesser extent, the temperature. And to make things even more complicated: when charging a battery more energy (Ah) has to be ‘pumped’ into the battery than can be retrieved during the next discharge. In other words: the charge efficiency is less than 100%. The battery monitor takes all these factors into consideration when calculating the state of charge.

5.2. Readout overview

The head unit display or the VictronConnect app battery monitor status screen, displays an overview of the most important parameters. These are:

- State of charge
- Battery voltage
- Battery current
- Power
- Aux input reading (starter battery, midpoint or temperature)

State of charge

This is the actual state of charge of the battery in a percentage and is compensated for both the Peukert efficiency and charge efficiency. The state of charge is the best way to monitor the battery.

A fully charged battery will be indicated by a value of 100.0%. A fully discharged battery will be indicated by a value of 0.0%.

Please note that if the state of charge indicates three dashes: “---” this means that the battery monitor is in an unsynchronised state. This mainly occurs when the battery monitor has just been installed or after the battery monitor has been left unpowered and is powered up again. For more information, see the Synchronising the battery monitor [23] chapter.

Voltage

This is the terminal voltage of the battery.

Current

This is the actual current flowing in or out of the battery. A negative current indicates that current is taken from the battery. This is the current needed for DC loads. A positive current means that current is going into the battery. This is current coming from charge sources. Keep in mind that the battery monitor will always indicate the total battery current, being the current traveling into the battery minus the current traveling out of the battery.

Power

The power drawn from or received by the battery.

Consumed Ah

The battery monitor keeps track of the Amp-hours removed from the battery compensated for the efficiency.

Example: If a current of 12A is drawn from a fully charged battery for a period of 3 hours, the readout will show -36.0Ah (-12 x 3 = -36).

Please note that if the "Consumed Ah" reading indicates three dashes: “---” this means that the battery monitor is in an unsynchronised state. This mainly occurs when the battery monitor has just been installed or after the battery monitor has been left unpowered and is powered up again. For more information, see the Synchronising the battery monitor [23] chapter.

Time remaining

The battery monitor estimates how long the battery can support the present load. This is the “time-to-go” readout and is the actual time left until the battery is discharged to the set “discharge floor”. The discharge floor is by default set at 50%. For the discharge floor setting see the Discharge floor [29] chapter. If the load is fluctuating heavily, it is best not to rely on this reading too much,

as it is a momentary readout and should be used as a guideline only. We recommend the use of the state of charge readout for accurate battery monitoring.

If the “Time remaining” indicates three dashes: “---” this means that the battery monitor is in an unsynchronised state. This occurs when the battery monitor has just been installed or after it has been left unpowered and is powered up again. For more information, see see the Synchronising the battery monitor [23] chapter.

Input

This is the state of the auxiliary input. Depending on how the battery monitor has been set up, you will see one of these options:

- **Starter battery voltage**: This shows the voltage of a second battery.
- **Battery temperature**: This shows the battery temperature of the main battery when the optional temperature sensor is used.
- **Midpoint voltage deviation**: This shows the deviation in a percentage of the main voltage of the battery bank top section compared to the voltage of the bottom section. For more information on this feature see the Midpoint voltage monitoring [46] chapter.

5.3. Using the head unit menus

Alternatively, use the VictronConnect app to access the battery monitor settings. See the chapter The VictronConnect app [14] on how to do this.

When the battery monitor is powered up for the first time or when the factory settings have been restored, the battery monitor will start the quick setup wizard; see chapter: Setup wizard [12]. After that, the battery monitor will operate in normal mode, and the battery menu can be accessed as described in this chapter.

The battery monitor is controlled by the four buttons on the head unit. The function of the buttons depends on which mode the battery monitor is in. This is indicated in the below table.

If the backlight is off, press any button to restore the backlight.

Button	Function when in normal mode	Function when in setup mode
SETUP	Press and hold for two seconds to switch to setup mode. The display will scroll the number and description of the selected parameter.	Press SETUP any time to return to the scrolling text, and press again to return to normal mode. When pressing SETUP while a parameter is out of range, the display blinks five times, and the nearest valid value is displayed.
SELECT	Press to switch to the history menu. Press to stop scrolling and show the value. Press again to switch back to normal mode.	• Press to stop scrolling after entering the setup mode with the SETUP button. • After editing the last digit, press to end editing. The value is stored automatically. A short beep indicates confirmation. • If required, press again to restart editing.
SETUP and SELECT simultaneously	Press and hold both SETUP and SELECT buttons simultaneously for three seconds to restore factory settings (disabled when setting 64, lock setup, is on, see Lock setup [39]).	n/a
+	Move upwards.	When not editing, press to move up to the previous parameter. When editing, this button will increment the value of the selected digit.
-	Move downwards. Press and hold for three seconds (until the confirmation beep) to start or stop automatic cycling through status items.	When not editing, press to move down to the next parameter. When editing, this button will decrement the value of the selected digit.
+ and - simultaneously	Press and hold both buttons simultaneously for three seconds to manually synchronise the BMV.	n/a

5.4. Trends

The VictronConnect app provides battery monitor data logging. Providing that the firmware battery monitor is up to date, the battery monitor will store up to 45 days of past data and two of the following parameters can be viewed alongside:

- Voltage (V).
- Current (A).
- Power (W).
- Consumed Amp Hours (Ah).
- State of charge (%).
- Temperature (°C).

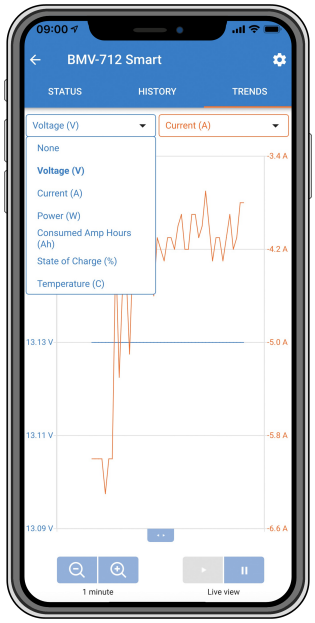

VictronConnect app battery monitor trends.

5.5. History

The battery monitor stores historic events. These can be used at a later date to evaluate usage patterns and battery health.

The history data is stored in a non-volatile memory and will not be lost when the power supply to the battery monitor has been interrupted or when the battery monitor has been reset to its defaults.

5.5.1. Accessing historical data via the VictronConnect app

The battery monitor's historical data can be accessed in the “History” tab in the VictronConnect app.

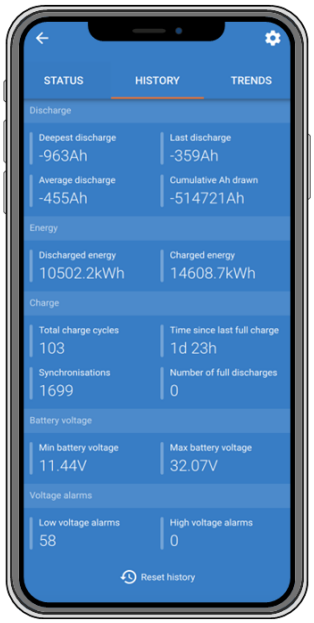

The VictronConnect app battery monitor history screen.

5.5.2. Accessing historical data via the head unit

To view the battery monitor history menu press SELECT when in normal mode:

- Press + or – to browse the various parameters.
- Press + or – to browse the various values.
- Press SELECT again to stop scrolling and show the value.
- Press SELECT again to leave the historical menu and to go back to the normal operation mode.

The below table gives an overview of the history parameters and how they are displayed in the menu. For the meaning of each parameter see the next chapter.

#	Display	Discription
A	A DEEPEST DISCHARGE	Deepest discharge
B	b LAST DISCHARGE	Last discharge
C	C AVERAGE DISCHARGE	Average discharge
D	d CYCLES	Cycles
E	E DISCHARGES	Discharges
F	F CUMULATIVE AH	Cumulative Ah
G	G LOWEST VOLTAGE	Lowest voltage
H	H HIGHEST VOLTAGE	Highest voltage
I	I DAYS SINCE LAST CHARGE	Days since last full charge
J	J SYNCHRONISATIONS	Synchronisations
L	L LOW VOLTAGE ALARMS	Low voltage alarms
M	M HIGH VOLTAGE ALARMS	High voltage alarms

#	Display	Discription
P	P LOWEST AUX VOLTAGE	Lowest AUX voltage
Q	Q HIGHEST AUX VOLTAGE	Highest AUX voltage
R	r dISCHARGED ENERGY	Discharged energy
S	S CHARGED ENERGY	Charged energy

5.5.3. History data

Discharge information in Ah

- **Deepest discharge:** The battery monitor remembers the deepest discharge and each time the battery is discharged deeper the old value will be overwritten.
- **Last discharge:** The battery monitor keeps track of the discharge during the current cycle and displays the largest value recorded for Ah consumed since the last synchronisation.
- **Average discharge:** The cumulative Ah drawn divided by the total number of cycles.
- **Cumulative Ah drawn:** The cumulative number of Amp hours drawn from the battery over the lifetime of the battery monitor.

Energy in kWh

- **Discharged energy:** This is the total amount of energy drawn from the battery in kWh.
- **Charged energy:** The total amount of energy absorbed by the battery in kWh.

Charge

- **Total charge cycles:** The number of charge cycles over the lifetime of the battery monitor. A charge cycle is counted every time the state of charge drops below 65% and then rises above 90%.
- **Time since last full charge:** The number of days since the last full charge.
- **Synchronisations:** The number of automatic synchronisations. A synchronisation is counted every time the state of charge drops below 90% before a synchronisation occurs.
- **Number of full discharges:** The number of full discharges. A full discharge is counted when the state of charge reaches 0%.

Battery voltage

- **Min battery voltage:** The lowest battery voltage.
- **Max battery voltage:** The highest battery voltage.
- **Min starter voltage:** The lowest auxiliary battery voltage (if applicable).
- **Max starter voltage:** The highest auxiliary battery voltage (if applicable).

Voltage alarms

- **Low voltage alarms:** The number of low voltage alarms.
- **High voltage alarms:** The number of high voltage alarms.

5.6. Alarms

The battery monitor can raise an alarm in the following situations:

- Low battery state of charge (SOC).
- Low battery voltage.
- High battery voltage.
- Low and high starter battery voltage (if the AUX input has been set to "Starter battery").
- Midpoint voltage (if the AUX input has been set to "Midpoint").
- High and Low battery temperature (if the AUX input has been set to "Temperature").

The alarm will activate when the value reaches a set threshold and will deactivate when the value clears this threshold. The thresholds are configurable. For more information, see the Alarm settings [34] chapter.

The alarm will be displayed on the head unit, a buzzer will sound, the display backlight will flash, and the alarm icon will be visible on the display. An alarm is acknowledged when a button is pressed. However, the alarm icon is displayed as long as the alarm condition remains. The programmable relay can be triggered depending on the configuration of the alarm settings.

The alarm is also a software alarm.

When connecting with the VictronConnect app, while an alarm is active, the alarm will show in the app. Alternatively, when the battery monitor is connected to a GX device, the alarm will show on the GX device display or the VRM portal.

In the case of the VictronConnect app, an alarm is acknowledged when a button is pressed. And in the case of a GX device, an alarm is acknowledged when viewed in notifications. The alarm icon is displayed as long as the alarm condition remains.

Left: alarm displayed on the VictronConnect app. Right: alarm displayed on a GX device.

5.7. Synchronising the battery monitor

For a reliable readout, the state of charge, as displayed by the battery monitor, must self-synchronise regularly with the true state of charge of the battery. This is to prevent drift of the “State of charge” value over time. A synchronisation will reset the state of charge of the battery to 100%.

5.7.1. Automatic synchronisation

Synchronisation is an automatic process and will occur when the battery has been fully charged. The battery monitor will look at a few parameters to ascertain that the battery has been fully charged. It will consider the battery to be fully charged when the voltage has reached a certain value and the current has dropped below a certain value for a certain amount of time.

These parameters are called:

- Charged voltage - the voltage level above which the battery is considered to be fully charged.
- Tail current - a percentage of the battery capacity.
- Charged detection time - the time in minutes.

As soon as these 3 parameters have been met, the battery monitor will set the state of charge value to 100%, thus synchronising the state of charge.

Example:

In the case of a 12V battery, the battery monitor will reset the battery’s state of charge to 100% when all these parameters have been met:

- The voltage exceeds 14.0V,
- the charge current is less than 4.0% of the total battery capacity (e.g. 8A for a 200Ah battery) and,
- 3 minutes have passed while both the voltage and current conditions are met.

The three parameters work together. The charged voltage must be set just below the voltage at which the charger completes the charge cycle, usually the absorption voltage. The tail current must be set higher than the current at which the charger stops or reduces charging. The charged detection time makes sure that a short voltage peak does not cause a synchronisation.

When the charged voltage is set too low, the battery voltage can exceed it while the battery is not fully charged. A typical example is a solar system at the end of the day: the battery is still far from full, but the battery voltage is above the charged voltage and the charge current slowly drops as the sun sets. The tail current and charged detection time conditions are then also met, and the battery monitor incorrectly sets the state of charge to 100%.

When the charged voltage is set too high, the battery voltage can never reach it. Automatic synchronisation will not take place and the state of charge will start to drift.

If the battery monitor does not perform a regular synchronisation, the state of charge value will start to drift over time. This is due to the small inaccuracies of the battery monitor and because of the estimation of the Peukert exponent [44]. Once a battery

has been fully charged, and the charger has gone to the float stage, the battery is full and the battery monitor will automatically synchronise by setting the state of charge value to 100%.

5.7.2. Manual synchronisation

The battery monitor can be synchronised manually if required. This can be done by pressing the "Synchronise" button in the VictronConnect app. Navigate to "settings" and then to "battery settings".

Alternatively, the battery monitor can be synchronised when in normal operating mode by simultaneously pressing and holding the + and – buttons for 3 seconds.

A manual synchronisation can be needed in situations when the battery monitor does not synchronise automatically. This is for example needed during the first installation or after the voltage supply to the battery monitor has been interrupted.

A manual synchronisation can also be needed when the battery has not been fully charged, or if the battery monitor has not detected that the battery has been fully charged because the charged voltage, current or time has been set incorrectly. In this case, review the settings and make sure the battery regularly receives a full charge.

5.8. Operation as a DC meter

The battery monitor can be set up as a DC energy meter. It is used to measure DC production or consumption of a specific device in a system, like for example an alternator, wind turbine or hydro generator. Or similarly, the consumption of a specific circuit or load in a DC system.

When in DC monitor mode, the voltage, current and power is displayed.

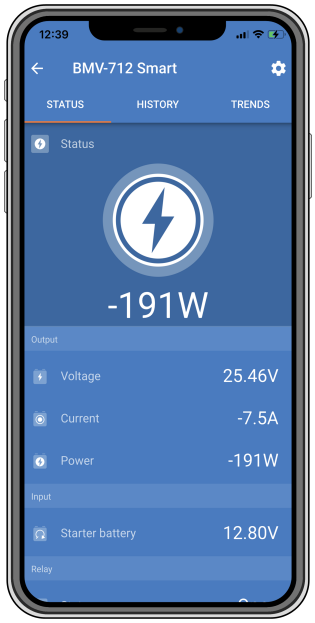

VictronConnect app status screen of a battery monitor running in DC monitor mode.

Note that the wiring of a DC meter differs from battery monitor wiring, see the Wiring for use as DC meter [11] chapter on how to wire. When switching between modes, it is recommended to reset all historical data.

6. Interfacing

The battery monitor can be connected to other equipment, this chapter describes how this can be done.

6.1. VictronConnect app via USB

The VictronConnect app can not only connect via Bluetooth but it can also connect via USB. A USB connection is essential when connecting to the Windows version of the VictronConnect app and is optional when the MacOS or Android version is used. Please note that in case of connecting to an Android phone or tablet a “USB on the Go” cable might be needed.

To connect via USB, you will need a VE.Direct to USB interface. Use this interface to connect the computer to the battery monitor. for more information see the VE.Direct to USB interface product page.

For more information also see the VictronConnect app manual.

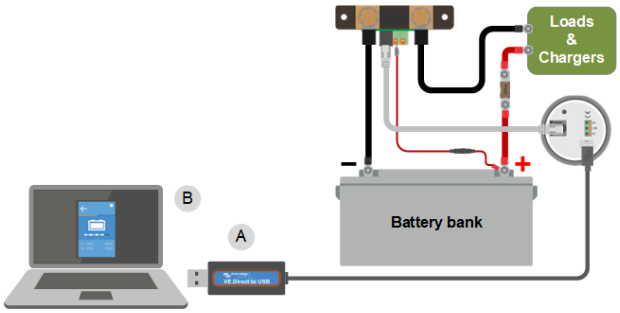

Example of a VE.Direct to USB interface connection between the battery monitor and a computer.

#	Description
A	VE.Direct to USB interface.
B	Computer or laptop.

6.2. Connecting to a GX device and the VRM portal

A GX device, such as the Cerbo GX, is a Victron Energy device that provides control and monitoring for all Victron equipment that is connected to it. Control and monitoring of the GX device and it's connected equipment can be done locally or remotely via our free Victron Remote Monitoring portal, the VRM portal.

The battery monitor can be connected to a GX device with a VE.Direct cable. The VE.Direct cables are available in lengths ranging from 0.3 to 10 meters and are available with straight or right-angle connectors. Alternatively, the battery monitor can also connect to a GX device using a VE.Direct to USB interface.

Once connected, the GX device can be used to read out all monitored battery parameters.

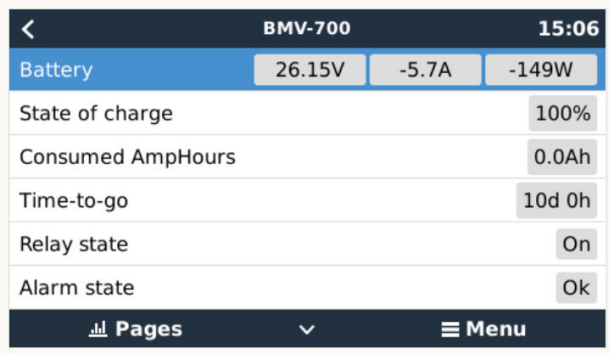

Battery monitor information displayed by a GX device.

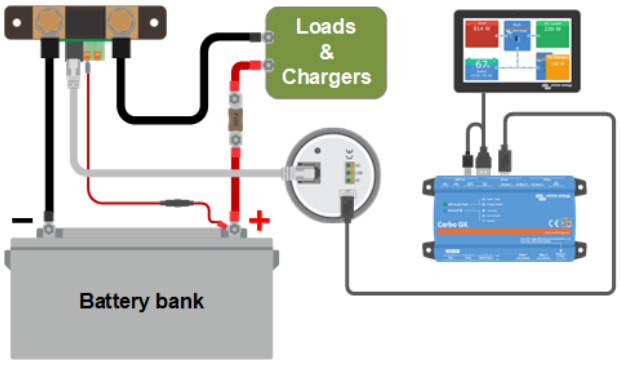

Example of a battery monitor connecting to a GX device.

6.3. Connecting to VE.Smart networking

VE.Smart networking is a wireless network that allows a number of Victron products to exchange information via Bluetooth. The battery monitor can share the following information with the network:

- Battery voltage.
- Battery current.
- Battery temperature. Note that an optional temperature sensor is needed see chapter Auxiliary connection for temperature monitoring [9] for more information.

A usage example is a system with VE.Smart networking that contains a battery monitor with a temperature sensor and a solar charger. The solar charger receives the battery voltage and temperature information from the battery monitor and uses this information to optimise its charge parameters. This will improve charging efficiency and will prolong battery life.

To make the battery monitor part of VE.Smart networking, you will have to either create a network or join an existing network. The setting can be found in the VictronConnect app. Navigate to the battery monitor page and then to: settings > smart networking. Please see the VE.Smart networking manual for more information.

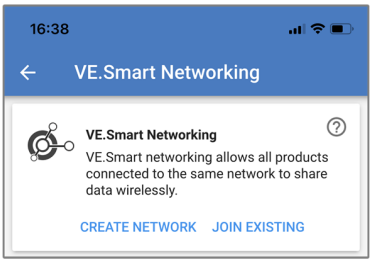

Creating a VE.Smart network using the VictronConnect app.

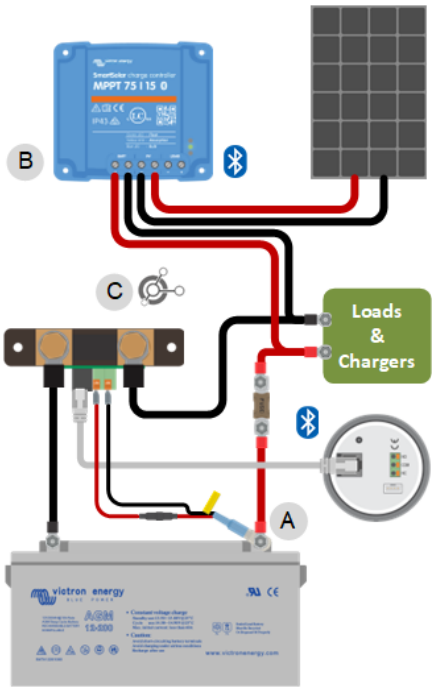

Example of a system containing a battery monitor with a temperature sensor and a solar charger, both using the VE.Smart networking.

6.4. Custom integration

Please note that this is an advanced feature and requires programming knowledge.

The VE.Direct communications port can be used to read data and change settings. The VE.Direct protocol is extremely simple to implement. Transmitting data to the battery monitor is not necessary for simple applications: the battery monitor automatically sends all readings every second.

All the details are explained in the Data communication with Victron Energy products document.

7. All features and settings

This chapter explains all battery monitor settings. In addition to this we also have a video available explaining these settings and how the interact with each other to achieve accurate battery monitoring for both lead acid and lithium batteries.

Link to the video:

https://www.youtube.com/embed/mEN15Z_S4kE

7.1. How to change settings

Settings can be changed by using the battery monitor's head unit or by using the VictronConnect app.

7.1.1. Accessing settings via the head unit

To access and change setting parameters use the buttons on the head unit in the following way:

- Press SETUP for two seconds to access these functions and use the+ and – buttons to browse them.
- Press SELECT to access the desired parameter.
- Use SELECT and the + and – buttons to customize. A short beep confirms the setting.
- Press SETUP at any time to return to the scrolling text, and press again to return to normal mode.

7.1.2. Accessing settings via the VictronConnect app

To access and change setting parameters do the following:

- Click on the settings symbol ⚙ to go to the battery settings menu.
- To navigate from the general settings menu to the product settings menu, click on the menu symbol ⋮.

For information on how to connect with the VictronConnect app to the battery monitor, see the The VictronConnect app [14] chapter.

7.1.3. Saving, loading and sharing settings in VictronConnect

In the settings menu you can find the following 3 symbols:

Save settings to file - This will save settings for reference or for later use.

Load settings from file - This will load earlier saved settings.

Share settings file – This allows you to share the settings file via email, message, airdrop and so on. The available sharing options depend on the platform used.

For more information on these features, see the VictronConnect manual.

7.2. Battery settings

The battery settings can be used to fine-tune the battery monitor. Please be careful when you change these settings, as a change might affect the battery monitor's state of charge calculations.

7.2.1. Battery capacity

This parameter is used to tell the battery monitor how big the battery is. This setting should already have been done during the initial installation.

The setting is the battery capacity in Amp-hours (Ah).

For more information on the battery capacity and the related Peukert exponent see the Battery capacity and Peukert exponent [44] chapter.

Setting	Default	Range	Step size
Battery capacity (setting 01)	200Ah	1 - 32500Ah	1Ah

The maximum battery capacity of 32500Ah is supported from firmware version v4.19 onwards; lower versions support a maximum of 9999Ah.

7.2.2. Charged voltage

The battery voltage must be above this voltage level to consider the battery as fully charged. As soon as the battery monitor detects that the voltage of the battery has reached this “charged voltage” parameter and the current has dropped below the “tail current [29]” parameter for the duration of the “charged detection time [29]” parameter, the battery monitor will set the state of charge to 100%.

Setting	Default	Range	Step size
Charged voltage (setting 02)	14.0V (12V nominal) 28.0V (24V nominal) 56.0V (48V nominal)	0 - 70V	0.1V

The table below indicates the recommended settings per battery type.

Nominal battery voltage	Charged voltage setting	
	Lithium	**Lead-acid**
12V	13.9V	14.0V
24V	27.8V	28.0V
36V	41.7V	42.0V
48V	55.6V	56.0V

7.2.3. Discharge floor

The “Discharge floor” parameter is used in the "time remaining" calculation. The battery monitor calculates the time it takes until the set “discharge floor [29]” has been reached. It is also used to set the state of charge alarm defaults.

For lead-acid batteries set this to 50% and for lithium set it lower.

Note that this setting only appears when accessing the battery monitor via the VictronConnect app. In case the battery monitor is accessed via the head unit, see the Low State of Charge (SoC) relay [33] setting instead.

Setting	Default setting	Range	Step size
Discharge floor	50%	0 - 99%	1%

7.2.4. Tail current

The battery is considered as fully charged once the charge current has dropped to less than this “Tail current” parameter. The “Tail current” parameter is expressed as a percentage of the battery capacity.

Note that some battery chargers stop charging when the current drops below a set threshold. In these cases, the tail current must be set higher than this threshold.

As soon as the battery monitor detects that the voltage of the battery has reached the set “Charged voltage [29]” parameter and the current has dropped below this “Tail current” parameter for a certain amount of time, the battery monitor will set the state of charge to 100%.

Setting	Default	Range	Step size
Tail current (setting 03)	4.00%	0.50 - 10.00%	0.1%

7.2.5. Charged detection time

This is the time the “Charged voltage [29]” parameter and the “Tail current [29]” parameter must be met in order to consider the battery fully charged.

Setting	Default setting	Range	Step size
Charged detection time (setting 04)	3 minutes	0 - 100 minutes	1 minute

7.2.6. Peukert exponent

Set the Peukert exponent parameter according to the battery specification sheet. If the Peukert exponent is unknown, set it at 1.25 for lead-acid batteries and set it at 1.01 for lithium batteries. A value of 1.00 disables the Peukert compensation. The Peukert value for lead-acid batteries can be calculated. For more information on the Peukert calculation, the Peukert exponent and how this relates to the battery capacity, see the Battery capacity and Peukert exponent [44] chapter.

Setting	Default	Range	Step size
Peukert exponent (setting 05)	1.25	1.00 - 1.50	0.01

7.2.7. Charge efficiency factor

The “Charge Efficiency Factor” compensates for the capacity (Ah) losses during charging. A setting of 100% means that there are no losses.

A charge efficiency of 95% means that 10Ah must be transferred to the battery to get 9.5Ah actually stored in the battery. The charge efficiency of a battery depends on battery type, age and usage. The battery monitor takes this phenomenon into account with the charge efficiency factor.

The charge efficiency of a lead acid battery is almost 100% as long as no gas generation takes place. Gassing means that part of the charge current is not transformed into chemical energy, which is stored in the plates of the battery, but is used to decompose water into oxygen and hydrogen gas (highly explosive!). The energy stored in the plates can be retrieved during the next discharge, whereas the energy used to decompose water is lost. Gassing can easily be observed in flooded batteries. Please note that the ‘oxygen only’ end of the charge phase of sealed (VRLA) gel and AGM batteries also results in a reduced charge efficiency.

Setting	Default setting	Range	Step size
Charge efficiency factor (setting 06)	95%	50 - 100%	1%

7.2.8. Current threshold

When the current measured falls below the “Current threshold” parameter it will be considered zero. The “Current threshold” is used to cancel out very small currents that can negatively affect the long-term state of charge readout in noisy environments. For example, if the actual long-term current is 0.0A and, due to injected noise or small offsets, the battery monitor measures 0.05A the battery monitor might, in the long term, incorrectly indicate that the battery is empty or will need to be recharged. When the current threshold in this example is set to 0.1A, the battery monitor calculates with 0.0A so that errors are eliminated.

A value of 0.0A disables this function.

Setting	Default	Range	Step size
Current threshold (setting 07)	0.10A	0.00 - 2.00A	0.01A

7.2.9. Time-to-go averaging period

The time-to-go averaging period specifies the time window (in minutes) that the moving averaging filter works. A value of 0 (zero) disables the filter and gives an instantaneous (real-time) readout. However, the displayed “Time remaining” value may fluctuate heavily. Selecting the longest time, 12 minutes, will ensure that only long-term load fluctuations are included in the “Time remaining” calculations.

Setting	Default	Range	Step size
Time-to-go averaging period (setting 08)	3 minutes	0 - 12 minutes	1 minute

7.2.10. Battery SOC on reset

Note that if you access this setting through the head unit, this setting will be categorized under "Miscellaneous settings". However, when accessed via the VictronConnect app, it falls under "Battery settings".

This setting determines the behaviour of the state of charge (SOC) value following a battery monitor reset. A reset occurs when the battery monitor is powered down and subsequently powered up again. This occurs during initial installation or disconnection, such as on a boat when the DC system is disconnected via the main DC breaker.

The "Battery SOC on reset" setting has the following modes:

- **Keep SOC** - The state of charge is set to its last known value. This is the default mode. In this mode, the battery monitor regularly stores the state of charge and, after losing power, resumes from the last known state of charge.
- **Clear** - The state of charge remains unknown until the synchronization levels are reached and synchronization occurs.

- **Set to 100%** - The state of charge is set to 100%.

Setting	Default	Modes
Battery SOC on reset (setting 70)	Keep SOC	Keep SOC Clear Set to 100%

This setting is only available when the battery monitor's firmware is version 4.12 or higher and the Bluetooth interface's firmware is version 2.42 or higher.

In case the battery monitor or Bluetooth interface firmware is older, this setting is called "Start synchronized" and offers the option to either turn it OFF (clear) or ON (set to 100%).

7.2.11. State of charge

With this setting, you can manually set the state of charge value. This setting is only active after the battery monitor has, at least once, been synchronised. Either automatically or manually.

This setting is only available when accessing the battery monitor via the VictronConnect app.

Setting	Default	Range	Step size
State of charge	-- %	0.0 - 100%	0.1%

7.2.12. Synchronise SoC to 100%

Setting 10

This option can be used to manually synchronise the battery monitor.

When navigating to this setting on the head unit , press the SELECT button to synchronize the battery monitor to 100%.

In the VictronConnect app press the ”Synchronise” button to synchronise the battery monitor to 100%.

See the Manual synchronisation [24] paragraph for more information on this setting.

7.2.13. Zero current calibration

Setting 09

This option can be used to calibrate the zero reading if the battery monitor reads a non-zero current even when there is no load and the battery is not being charged.

A zero current calibration is (almost) never needed. Only perform this procedure in case the battery monitor shows a current while you are absolutely sure that there is no actual current flowing. The only way to be sure is to physically disconnect all wires and cables connected to the LOAD AND CHARGER side of the shunt. Do this by unscrewing the shunt bolt and removing all cables and wires from that side of the shunt. The alternative, switching loads or chargers off, is NOT accurate enough as this does not eliminate small standby currents.

Ensure that there really is no current flowing into or out of the battery (disconnect the cable between the load and the shunt), then press SELECT in the head unit menu or press CALIBRATE in the VictronConnect app.

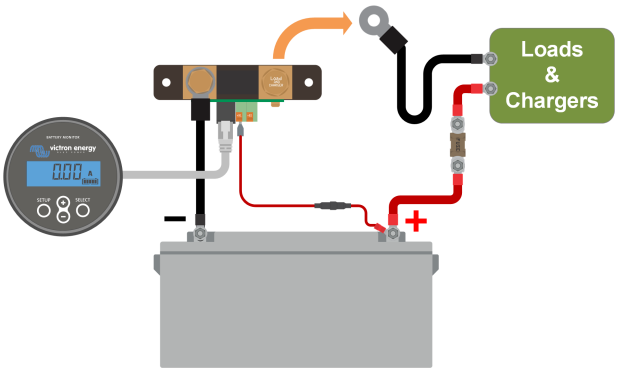

Performing a zero current calibration.

7.3. Relay settings

The battery monitor is equipped with a programmable relay. These settings are used to program the function of the relay.

The relay settings are disabled by default (except the State of Charge (SoC) relay setting). To enable, a relay setting do the following:

- In the VictronConnect app, enable the relay setting by sliding the slider button to the right.
- Via the head unit, enable the relay setting by changing the set and clear value to any value above zero.

7.3.1. Relay mode

This setting has the following relay modes, namely:

Setting	Default mode	Modes	Description
Relay mode (setting 11)	DFLT	DFLT Default mode.	The relay settings 16 up to 31 can be used to control the relay.
		CHRG Charger mode.	The relay will close when the state of charge falls below setting 16 (discharge floor) or when the battery voltage falls below setting 18 (low voltage relay). The relay will be open when the state of charge is higher than setting 17 (clear state of charge relay) and the battery voltage is higher than setting 19 (clear low voltage relay). An application example is to start and stop control of a generator, together with settings 14 and 15.
		REM Remote mode.	The relay can be controlled via the VE.Direct interface. Relay settings 12 and 14 up to 31 are ignored as the relay is under the full control of the device connected via the VE.Direct interface.

7.3.2. Invert relay

This function enables selection between a normally de-energised (contact open) or a normally energised (contact closed) relay.

When inverted, the open and closed conditions as described in all the relay settings are inverted (with the exception of the Relay state [32]).

Note that the "normally energised" setting will slightly increase the power consumption of the battery monitor.

Setting	Default mode	Modes	Range
Invert relay (setting 12)	OFF	OFF	Normally de-energised
		ON	Normally energised

7.3.3. Relay state

This is a read-only parameter and it displays whether the relay is open or closed (de-energised or energised).

Setting	Value	Description
Relay state (setting 13)	OPEN	The relay is open (de-energised)
	CLSD	The relay is closed (energised)

7.3.4. Relay minimum closed time

Sets the minimum time the "closed" condition will remain present after the relay has been energised.

Note that this changes to "open" and de-energised if the relay function has been inverted (Invert relay [32] setting).

An application example is to set a minimum generator run time when the relay is set to "charger" mode (Relay mode [32] setting).

Setting	Default	Range	Step size
Relay minimum closed time (setting 14)	0 minutes	0 - 8 hours	1 minute

7.3.5. Relay off delay

Sets the amount of time the "de-energise relay" condition must be present before the relay opens.

An application example is to keep a generator running for a while to charge the battery better when the relay is set to "charger" mode (Relay mode [32] setting).

Setting	Default	Range	Step size
Relay off delay (setting 15)	0 minutes	0 - 500 minutes	1 minute

7.3.6. Low State of Charge (SoC) relay

When the state of charge percentage has fallen below the "set relay" value, the relay will close.

When the state of charge percentage has risen above the "clear relay" value, the relay will open (after a delay, depending on the Relay minimum closed time [32] and/or the Relay off delay [33] settings).

The "clear relay" value needs to be greater than the "set relay" value.

Setting	Default	Range	Step size
Set relay value (setting 16)	50%	0 - 99%	1%
Clear relay value (setting 17)	90%	0 - 99%	1%

When the "set relay" and "clear relay" values are equal, the state of charge condition will be unable to drive the relay.

Note that this setting is also known as the discharge floor. The time-to-go reading displayed by the battery monitor relates to this setting. The time to go is the time left until this setting (the discharge floor) has been reached.

7.3.7. Low voltage relay

When the battery voltage falls below the "set relay" value for more than 10 seconds the relay will close.

When the battery voltage rises above the "clear relay" value, the relay will open (after a delay, depending on the Relay minimum closed time [32] and/or the Relay off delay [33] settings).

The "clear relay" value needs to be greater than the "set relay" value.

Setting	Default	Range	Step size
Set relay value (setting 18)	0V	0 - 95V	0.1V
Clear relay value (setting 19)	0V	0 - 95V	0.1V

7.3.8. High voltage relay

When the battery voltage rises above the "set relay" value for more than 10 seconds the relay will close.

When the battery voltage falls below the "clear relay" value, the relay will open (after a delay, depending on the Relay minimum closed time [32] and/or the Relay off delay [33] settings).

The "clear relay" value needs to be greater than the "set relay" value.

Setting	Default	Range	Step size
Set relay value (setting 20)	0V	0 - 95V	0.1V
Clear relay value (setting 21)	0V	0 - 95V	0.1V

7.3.9. Low starter voltage relay

This setting is available if the aux input has been set to "Starter battery", see the Aux input [40] setting.

When the auxiliary (e.g. starter battery) voltage falls below "set relay" value for more than 10 seconds, the relay will be closed.

When the auxiliary voltage rises above the "clear relay" value, the relay will open (after a delay, depending on the Relay minimum closed time [32] and/or the Relay off delay [33] settings).

The "clear relay" value needs to be greater than the "set relay" value.

Setting	Default	Range	Step size
Set relay value (setting 20)	0V	0 - 95V	0.1V
Clear relay value (setting 21)	0V	0 - 95V	0.1V

7.3.10. High starter voltage relay

This setting is available if the aux input has been set to "Starter battery", see the Aux input [40] setting.

When the auxiliary (e.g. starter battery) voltage rises above the "set relay" value for more than 10 seconds, the relay will be closed.

When the auxiliary voltage falls below the "clear relay" value, the relay will open (after a delay, depending on the Relay minimum closed time [32] and/or the Relay off delay [33] settings).

The "clear relay" value needs to be greater than the "set relay" value.

Setting	Default	Range	Step size
Set relay value (setting 24)	0V	0 - 95V	0.1V
Clear relay value (setting 25)	0V	0 - 95V	0.1V

7.3.11. Low temperature relay

This setting is available if the aux input has been set to "Temperature", see the Aux input [40] setting.

Use the Temperature unit setting [42] to choose between °C or °F temperature units.

When the battery temperature drops below the "set relay" value for more than 10 seconds the relay will close.

When the battery temperature rises above the "clear relay" value, the relay will open (after a delay, depending on the Relay minimum closed time [32] and/or the Relay off delay [33] settings).

Setting	Default	Range	Step size
Set relay value (setting 28)	0°C 0°F	-40 - +99°C -40 - +210°F	1°C 1°F
Clear relay value (setting 29)	0°C 0°F	-40 - +99°C -40 - +210°F	1°C 1°F

7.3.12. Mid voltage relay

This setting is available if the aux input has been set to "Mid point", see the Aux input [40] setting.

See the chapter Midpoint voltage monitoring [46] for more information about the midpoint voltage.

When the midpoint voltage deviation rises above the "set relay" value, the relay will close.

When the midpoint voltage deviation falls below the "clear relay" value, the relay will open (after a delay, depending on the Relay minimum closed time [32] and/or the Relay off delay [33] settings).

Setting	Default	Range	Step size
Set relay value (setting 30)	0%	0 - 99%	1%
Clear relay value (setting 31)	0%	0 - 99%	1%

7.4. Alarm settings

The BMV battery monitor is equipped with an alarm relay and a buzzer. Alarms are also visible on the VictronConnect app while connected to the battery monitor or are used to send an alarm signal to a GX device.

Alarms are disabled by default. To enable do the following:

- In the VictronConnect app, enable the alarm by sliding the slider button to the right.
- Via the head unit, enable the alarm by changing the "set" and "clear" value in the alarm settings to any value above zero.

7.4.1. Alarm buzzer

When enabled (set to ON), the buzzer will sound an alarm as soon as an alarm condition occurs. After a button is pressed, the buzzer will stop sounding.

When disabled (set to OFF) the buzzer will not sound an alarm.

Setting	Default	Modes
Alarm buzzer (setting 32)	ON	ON OFF

7.4.2. Low SoC alarm settings

When enabled, the alarm will activate when the state of charge (SoC) falls below the set value for more than 10 seconds. The alarm will deactivate when the state of charge rises above the clear value

Setting	Default	Range	Steps
Set alarm value (setting 33)	1%	0 - 100%	1%
Clear alarm value (setting 34)	1%	0 - 100%	1%

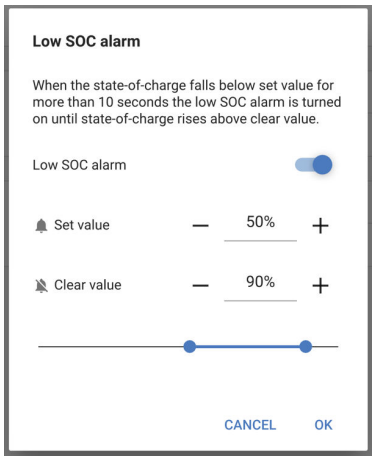

7.4.3. Low voltage alarm

When enabled, the alarm will activate when the battery voltage falls below the set value for more than 10 seconds. The alarm will deactivate when the battery voltage rises above the clear value.

Setting	Default	Range	Steps
Set alarm value (setting 35)	1.1V	0 - 95.0V	0.1V
Clear alarm value (setting 36)	1.0V	0 - 95.0V	0.1V

7.4.4. High voltage alarm

When enabled, the alarm will activate when the battery voltage rises above the set value for more than 10 seconds. The alarm will deactivate when the battery voltage drops below the clear value.

Setting	Default	Range	Steps
Set alarm value (setting 37)	1.1V	0 - 95.0V	0.1V
Clear alarm value (setting 38)	1.0V	0 - 95.0V	0.1V

7.4.5. Low starter voltage alarm

This setting is only available if the Aux input has been set to “Starter battery”, see chapter Aux input [40].

When enabled, the alarm will activate when the starter battery voltage falls below the set value for more than 10 seconds. The alarm will deactivate when the starter battery voltage rises above the clear value.

Setting	Default	Range	Steps
Set alarm value (setting 39)	1.1V	0 - 95.0V	0.1V
Clear alarm value (setting 40)	1.0V	0 - 95.0V	0.1V

7.4.6. High starter voltage alarm

This setting is only available if the Aux input has been set to “Starter battery”, see chapter Aux input [40].

When enabled, the alarm will activate when the starter battery voltage rises above the set value for more than 10 seconds and the alarm will deactivate when the starter battery voltage drops below the clear value.

Setting	Default	Range	Steps
Set alarm value (setting 41)	1.1 V	0 - 95.0V	0.1V
Clear alarm value (setting 42)	1.0 V	0 - 95.0V	0.1V

7.4.7. High temperature alarm

This setting is only available if the Aux input has been set to “temperature”, see chapter Aux input [40].

When enabled, the alarm will activate when the battery temperature rises above the set value for more than 10 seconds. The alarm will deactivate when the battery temperature drops below the clear value.

Setting	Default	Range	Step size
Set relay value (setting 43)	0°C 0°F	-40 - +99°C -40 - +210°F	1°C 1°F
Clear relay value (setting 44)	0°C 0°F	-40 - +99°C -40 - +210°F	1°C 1°F

7.4.8. Low temperature alarm

This setting is only available if the Aux input has been set to “temperature”, see chapter Aux input [40].

When enabled, the alarm will activate when the battery temperature falls below the set value for more than 10 seconds. The alarm will deactivate when the battery temperature rises above the clear value.

Setting	Default	Range	Step size
Set relay value (setting 45)	0°C 0°F	-40 - +99°C -40 - +210°F	1°C 1°F
Clear relay value (setting 46)	0°C 0°F	-40 - +99°C -40 - +210°F	1°C 1°F

7.4.9. Midpoint deviation alarm

This setting is only available if the Aux input has been set to “Midpoint”; see chapter Aux input [40].

When enabled, the alarm will activate when the midpoint voltage deviation rises above the set value for more than 10 seconds. The alarm will deactivate when the midpoint voltage deviation drops below the clear value.

Setting	Default	Range	Steps
Set alarm value (setting 47)	2 %	0 - 99 %	1 %
Clear alarm value (setting 48)	1 %	0 - 99 %	1 %

7.5. Display settings

7.5.1. Backlight intensity

The intensity of the backlight This setting ranges from 0 (always off) to 9 (maximum intensity).

Setting	Default	Range	Step size
Backlight intensity (setting 49)	5	0 - 9	1

7.5.2. Backlight always on

When set the backlight will not automatically turn off after 60 seconds of inactivity.

Setting	Default	Modes
Backlight always on (setting 50)	OFF	ON OFF

7.5.3. Scroll speed

The scroll speed of the display. This setting ranges from 1 (very slow) to 5 (very fast).

Setting	Default	Range	Step size
Scroll speed (setting 51)	2	1 - 5	1

7.5.4. Main voltage display

Must be set to ON to display the voltage of the main battery in the monitoring menu.

Setting	Default	Modes
Main voltage display (setting 52)	ON	ON OFF

7.5.5. Current display

Must be set to ON to display the current in the monitoring menu.

Setting	Default	Modes
Current display (setting 53)	ON	ON OFF

7.5.6. Power display

Must be set to ON to display the power measurement in the monitoring menu.

Setting	Default	Modes
Power display (setting 54)	ON	ON OFF

7.5.7. Consumed Ah display

Must be set to ON to display the consumed Ah in the monitoring menu.

Setting	Default	Modes
Consumed Ah display (setting 55)	ON	ON OFF

7.5.8. State of charge display

Must be set to ON to display the battery state of charge in the monitoring menu.

Setting	Default	Range	Step size
State of charge display (setting 56)	5	1 - 5	1

7.5.9. Time-to-go display

Must be set to ON to display the state of charge in the monitoring menu.

Setting	Default	Modes
Time-to-go display (setting 57)	ON	ON OFF

7.5.10. Starter voltage display

Must be set to ON to display the auxiliary voltage in the monitoring menu.

Setting	Default	Modes
Starter voltage display (setting 58)	ON	ON OFF

7.5.11. Temperature display

Must be set to ON to display the battery temperature in the monitoring menu.

Setting	Default	Modes
Temperature display (setting 59)	ON	ON OFF

7.5.12. Mid-voltage display

Must be set to ON to display the midpoint deviation percentage in the monitoring menu.

Setting	Default	Modes
Mid-voltage display (setting 60)	ON	ON OFF

7.6. Miscellaneous settings

7.6.1. Software version

Setting 61

This is a read-only setting. it displays the firmware version of the battery monitor.

The software version as displayed on the head unit is the same as the firmware version as displayed in the VictronConnect app product settings. In addition to this, the VictronConnect app also allows updating of the firmware. For more information see the Firmware [43] setting.

Setting	Default	Mode
Software version (setting 61)	Displays the battery monitor firmware version.	Read-only

7.6.2. Restore defaults

Setting 62

This head unit setting resets all settings to factory default.

The defaults can also be restored via the VictronConnect app. For more information on how to do this see the Reset to defaults [43] chapter.

To restore defaults do the following:

- Navigate to setting 62: the text "restore defaults" is displayed
- Press SELECT on the head unit: the blinking text "reset" is displayed.
- Press SELECT again: a beep is heard, and all settings have gone back to factory default.
- Should the reset function have been entered accidentally and the text "reset" is blinking, press SETUP to leave and go back to the regular settings menu.

Note that restoring the defaults does not clear the history settings. To clear the history see the Clear history [39] setting.

When in normal operating mode, the factory settings can also be restored by pressing SETUP and SELECT simultaneously for 3 seconds on the head unit. Note that this is only possible if the Lock setup [39] setting is off.

7.6.3. Clear history

Setting 63

This setting resets all settings to factory default. To clear the history do the following:

- Navigate to setting 63: the text "clear history" is displayed
- Press SELECT on the head unit: the blinking text "clear" is displayed.
- Press SELECT again: a beep is heard and all settings have gone back to factory default.
- Should the reset function have been entered accidentally and the text "clear" is blinking, press SETUP to leave and go back to the regular settings menu.

The history can also be cleared via the VictronConnect app, for more information on how to do this see the Reset history [42] chapter.

> ⚠ Please be aware that history data is an important tool to keep track of battery performance and is also needed to diagnose possible battery problems. Do not clear the history unless the battery bank is replaced.

7.6.4. Lock setup

When on, all settings (except this one) are locked (read-only) and cannot be altered via the head unit. Note that they still can be altered via the VictronConnect app.

Setting	Default	Modes
Lock setup (setting 64)	OFF	ON/OFF

7.6.5. Shunt current

When a shunt other than the one supplied with the battery monitor is used, use this setting to set the rated current of the shunt.

Setting	Default	Range	Step size
Shunt current (setting 65)	500A	1 - 9999A	1A

7.6.6. Shunt voltage

When a shunt other than the one supplied with the battery monitor is used, use this setting to change the rated voltage of the shunt.

Setting	Default	Range	Step size
Shunt voltage (setting 66)	50mV	1 - 75mV	1mV

7.6.7. Temperature unit

This setting is available if the aux input has been set to "Temperature", see the Aux input [40] setting.

Use this setting to select the temperature unit the battery monitor head unit is using.

Note that this setting only affects the battery monitor head unit display and settings. To change the temperature unit in the VictronConnect app see Temperature unit setting [42].

Setting	Default	Modes
Temperature unit (setting 67)	CELC	CELC/FAHR

7.6.8. Temperature coefficient

This setting is available if the aux input has been set to "Temperature", see the Aux input [40] setting.

The available battery capacity decreases with temperature. The temperature coefficient (delta T) is the percentage the battery capacity changes with temperature when temperature decreases to less than 20°C (above 20°C the influence of temperature on capacity is relatively low and is not taken into account). Typically, the reduction, compared to the capacity at 20°C, is 18% at 0°C and 40% at -20°C.

The unit of this value is “%cap/°C” or per cent capacity per degree Celsius.

The typical value (below 20°C) is 1%cap/°C for lead acid batteries, and 0.5%cap/°C for LFP batteries.

Setting	Default	Range	Step size
Temperature coefficient (setting 68)	0.0%cap/°C 0.0%cap/°F	0 - 2.0%cap/°C 0 - 3.6%cap/°F	0.1%cap/°C 0.1%cap/°F

7.6.9. Aux input

This setting sets the function of the auxiliary input. Select between: None, Starter battery, Midpoint or Temperature.

Setting	Default	Modes	Description
Aux input (setting 69)	NONE	NONE	Disables the auxiliary input.
		START	Auxiliary voltage, e.g. a starter battery
		MID	Midpoint voltage
		TEMP	Battery temperature. Note that a special temperature sensor is needed. For more information see: Auxiliary connection for temperature monitoring [9]

7.6.10. Battery starts synchronised

Note that if the battery monitor settings are accessed via the head unit, this setting will be part of the miscellaneous setting, and if accessed via VictronConnect it will be part of the battery settings.

For full information about this setting see the Battery SOC on reset [30] chapter.

Setting	Default	Modes
Start synchronized (setting 70)	ON	ON/OFF

7.6.11. Bluetooth mode

Determines whether to enable Bluetooth. If turned OFF using the VictronConnect app, the Bluetooth functionality is not disabled until disconnected from the BMV.

Setting	Default	Modes
Bluetooth mode (setting 71)	ON	ON/OFF

7.6.12. Monitor Mode

Setting 72

If you wish to use the battery monitor to monitor individual DC circuits rather than as a whole-of-system battery monitor, you can change the "Monitor mode" setting in the "Misc" menu from "Battery Monitor" to "DC Energy Meter".

If "DC meter" is selected, you can select the following types:

Solar charger, Wind charger, Shaft generator, Alternator, Fuel cell, Water generator, DC-DC charger, AC charger, Generic source, Generic load, Electric drive, Fridge, Water pump, Bilge pump, DC system, Inverter, Water heater.

When connected to a GX device, the type, the current and the power is shown in the user interface, and this information is also available on the VRM Portal.

When the GX device is also configured as type “has DC System”, the GX does more than just recording and visualisation:

1. The power shown in the DC system box is the sum of power reported by all battery monitors configured as such. Having multiple meters can be useful, for example, in a catamaran, so that the DC systems in the port hull and in the starboard hull are being measured.

2. The DC system current is being compensated for when setting DVCC charge current limits to inverter/chargers and solar chargers. For example, when a load of 50A is being measured, and CCL by the battery is 25A, the limit given to the inverter/charger or solar charger is 75A.

See the GX device documentation for more information about these advanced features, especially refer to the Distributed voltage and current control chapter.

7.6.13. Current measurement direction

The current-measurement direction setting allows you to choose on which side of the shunt the battery (or battery bank) is connected. This ensures that current-flow calculations use the correct polarity.

- **Normal mode (off):** the battery negative is connected to the shunt’s **battery** terminal.
- **Reversed mode (on):** the battery negative is connected to the shunt’s **load** terminal.

VictronConnect app setting	Default setting	Modes
Current measurement direction	Normal	Normal Reversed

BMV display setting	Default setting	Modes
Reverse shunt direction (setting 76)	off	off on

This setting was introduced in firmware version v4.19 and is not supported in earlier versions.

This setting is protected by the "Settings Lock" feature (so if the settings are locked, this setting cannot be changed).

7.7. Additional settings

These VictronConnect settings are not located in the VictronConnect settings menu but are located elsewhere in the VictronConnect app.

7.7.1. Reset history

This setting can be found at the bottom of the history tab.

This setting can also be made via the head unit. For more information see the Clear history [39]chapter.

> ⚠ Please be aware that history data is an important tool to keep track of battery performance and is also needed to diagnose possible battery problems. Do not clear the history unless the battery bank is replaced.

7.7.2. Reset PIN code

Note that the PIN code is only applicable when connecting to the battery monitor via Bluetooth.

This setting can be found in the settings of the VictronConnect app itself. Leave the battery monitor by clicking on the ← arrow. This will bring you back to the device list of the VictronConnect app. Now, click on the menu symbol next to the battery monitor listing.

A new window will open which allows you to reset the PIN code back to its default: 000000. To be able to reset the PIN code you will need the enter the battery monitor unique PUK code. The PUK code is printed on the product information sticker on the Battery monitor.

7.7.3. Temperature unit setting

This setting can be found in the settings of the VictronConnect app itself. Leave the battery monitor page by clicking on the ← arrow. This will bring you back to the device list of the VictronConnect app. Click on the menu ⋮symbol and then click on the settings ⚙symbol. Here you can select the “Display temperature unit”. Selecting Celsius will display the temperature in °C and selecting Fahrenheit will display the temperature in °F.

7.7.4. Serial number

The serial number can be found in the battery monitor product info section of the VictronConnect app or on the product information sticker rear of the battery monitor head unit.

7.7.5. Disabling and re-enabling Bluetooth

Bluetooth is enabled by default in the battery monitor. If Bluetooth is not wanted it can be disabled. This is done by sliding the Bluetooth switch in the product settings.

A reason to disable Bluetooth could be for security reasons, or to eliminate unwanted transmission from the Battery monitor.

As soon as Bluetooth has been disabled the only way to communicate with the battery monitor is via its VE.Direct port.

This is done via the USB to VE.Direct interface or via a GX device connected to the battery monitor via a VE.Direct cable or the USB to VE.Direct interface. For more info see the VictronConnect app via USB [25] chapter.

Bluetooth can be re-enabled by connecting to the battery monitor with VictronConnect via the VE.Direct – USB interface. Once connected you can navigate to the product settings menu and re-enable Bluetooth.

For more information also see the VictronConnect manual.

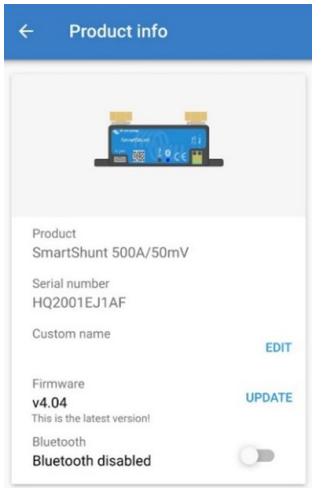

VictronConnect product info screen.

7.7.6. Changing PIN code

In the battery monitor Bluetooth interface product info the PIN code can be changed.

7.7.7. Custom name

In the battery monitor product information screen, you can change the name of the battery monitor. By default, it is called by its product name. But a more applicable name might be needed, especially if you are using multiple battery monitors in close proximity of each other it might become confusing with which battery monitor you are communicating. You can, for example, add identification numbers to their name, like: Battery Monitor A, Battery Monitor B and so on.

7.7.8. Firmware

Both the battery monitor and its Bluetooth interface run on firmware.

Occasionally a newer firmware version is available. New firmware is released to either add features or to fix a bug. The product overview in the VictronConnect app displays the battery monitor and the Bluetooth interface firmware version. It also indicates whether the firmware is the latest version, and there is a button you can press to update the firmware.

On the first installation, it is always recommended to update to the most recent firmware (if available). Whenever you connect to the battery monitor with an up-to-date version of the VictronConnect app, it will check the firmware, and if there is a newer version available, it will ask you to update the firmware. The VictronConnect app contains the actual firmware files, so an internet connection is not needed to update to the most recent firmware as long as you are using the most up-to-date version of the VictronConnect app.

A firmware update is not mandatory. If you choose not to update the firmware, you can only read out the battery monitor, but you cannot change settings. Settings can only be changed if the battery monitor runs on the most recent firmware.

For more information on firmware updates also see the VictronConnect app manual Firmware update chapter.

This setting is also available via the head unit Software version [39] setting. But note that this is a read-only setting. The firmware cannot be updated via the head unit.

7.7.9. Reset to defaults

To set all settings back to default select “Reset to defaults”. Please note that this only resets all settings to their default values, the history is not reset.

This setting is also available via the head unit. For more information see the Restore defaults [39] chapter.

8. Battery capacity and Peukert exponent

Battery capacity is expressed in Amp hour (Ah) and indicates how much current a battery can supply over time. For example, if a 100Ah battery is being discharged with a constant current of 5A, the battery will be totally discharged in 20 hours.

The rate at which a battery is being discharged is expressed as the C rating. The C rating indicates how many hours a battery with a given capacity will last. 1C is the 1h rate and means that the discharge current will discharge the entire battery in 1 hour. For a battery with a capacity of 100Ah, this equates to a discharge current of 100A. A 5C rate for this battery would be 500A for 12 minutes (1/5 hours), and a C5 rate would be 20A for 5 hours.

There are two ways of expressing the C rating of a battery. Either with a number before the C or with a number after the C.

For example:

- 5C is the same as C0.2
- 1C is the same as C1
- 0.2C is the same as C5

The capacity of a battery depends on the rate of discharge. The faster the rate of discharge, the less capacity will be available. The relation between slow or fast discharge can be calculated by Peukert's law and is expressed by the Peukert exponent. Some battery chemistries suffer more from this phenomenon than others. Lead acid are more affected by this than lithium batteries are. The battery monitor takes this phenomenon into account with Peukert exponent.

Discharge rate example

A lead acid battery is rated at 100Ah at C20, this means that this battery can deliver a total current of 100A over 20 hours at a rate of 5A per hour. C20 = 100Ah (5 x 20 = 100).

When the same 100Ah battery is discharged completely in two hours, its capacity is greatly reduced. Because of the higher rate of discharge, it may only give C2 = 56Ah.

Peukert's formula

The value which can be adjusted in Peukert's formula is the exponent n: see the formula below.

In the battery monitor the Peukert exponent can be adjusted from 1.00 to 1.50. The higher the Peukert exponent the faster the effective capacity 'shrinks' with increasing discharge rate. An ideal (theoretical) battery has a Peukert exponent of 1.00 and has a fixed capacity regardless of the size of the discharge current. The default setting in the battery monitor for the Peukert exponent is 1.25. This is an acceptable average value for most lead acid batteries.

Peukert's equation is stated below:

$Cp = I^n \times t$ Where Peukert's exponent n is:

$$n = \frac{\log t2 - \log t1}{\log I1 - \log I2}$$

To calculate the Peukert exponent you will need two rated battery capacities. This is usually the 20h discharge rate and the 5h rate, but can also be the 10h and 5h, or the 20h and the 10h rate. Ideally use a low discharge rating together with a substantially higher rating. Battery capacity ratings can be found in the battery datasheet. If in doubt contact your battery supplier.

Calculation example using the 5h and the 20h rating

The C5 rating is 75Ah. The t1 rating is 5h and I1 is calculated:

$$I_1 = \frac{75Ah}{5h} = 15A$$

The C20 rating is 100Ah. The t2 rating is 20h and I2 is calculated:

$$I_2 = \frac{100Ah}{20h} = 5A$$

The Peukert exponent is:

$$n = \frac{\log 20 - \log 5}{\log 15 - \log 5} = 1.26$$

A Peukert calculator is available at http://www.victronenergy.com/support-and-downloads/software#peukert-calculator.

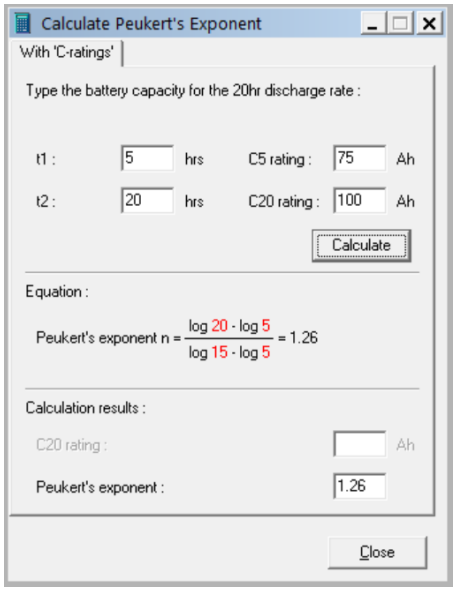

Please note that the Peukert exponent is no more than a rough approximation of reality. In case of very high currents, the battery will give even less capacity than predicted by a fixed exponent. We do not recommend changing the default value in the battery monitor, except in the case of lithium batteries.

9. Midpoint voltage monitoring

One bad cell or one bad battery can destroy a large, expensive battery bank.

A short circuit or high internal leakage current in one cell for example will result in undercharge of that cell and overcharge of the other cells. Similarly, one bad battery in a 24V or 48V bank of several series/parallel connected 12V batteries can destroy the whole bank.

Moreover, when new cells or batteries are connected in series, they should all have the same initial state of charge. Small differences will be ironed out during absorption or equalize charging, but large differences will result in damage during charging due to excessive gassing of the cells or batteries with the highest initial state of charge.

A timely alarm can be generated by monitoring the midpoint of the battery bank (i.e. by splitting the string voltage in half and comparing the two string voltage halves).

The midpoint deviation will be small when the battery bank is at rest, and will increase:

- At the end of the bulk phase during charging (the voltage of well charged cells will increase rapidly while lagging cells still need more charging).
- When discharging the battery bank until the voltage of the weakest cells starts to decrease rapidly.
- At high charge and discharge rates.

9.1. Battery bank and midpoint wiring diagrams

9.1.1. Connecting and monitoring midpoint in a 24V battery bank

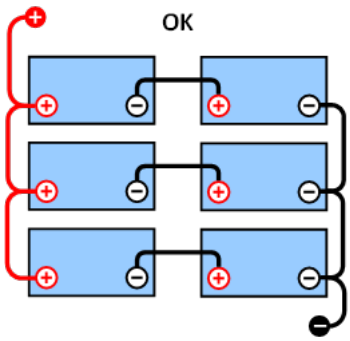

GOOD: *The midpoints are not connected and without busbars or midpoint monitoring.*

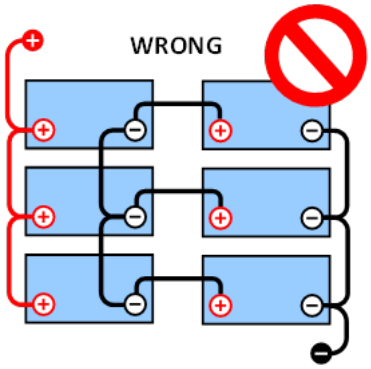

WRONG: *The midpoints are connected and without busbars or midpoint monitoring.*

Due to the voltage drop over the positive and the negative cables the midpoint voltage is not identical.

In an unmonitored battery bank, the midpoints should not be interconnected; since one bad battery bank can go unnoticed and could damage all other batteries.

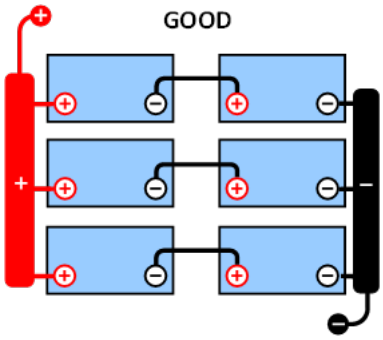

GOOD: *The midpoints are not connected; busbars are used but without midpoint monitoring.*

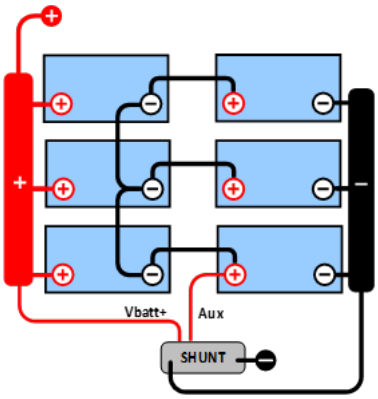

GOOD: *The midpoints are connected, with busbars and midpoint monitoring.*

Always use busbars when applying midpoint voltage monitoring. The cables to the busbars must all have the same length.

The midpoints can only be connected if corrective action is taken in case of an alarm.

9.1.2. Connecting and monitoring midpoint in a 48V battery bank

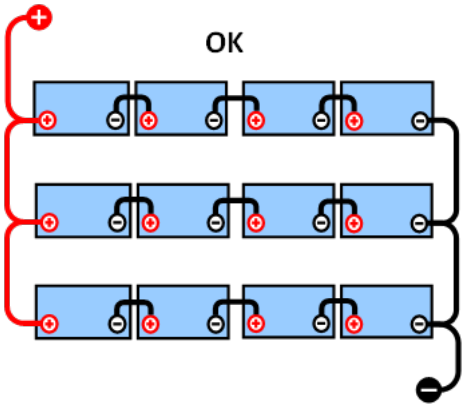

GOOD: *The midpoints are not connected and without busbars or midpint monitoring.*

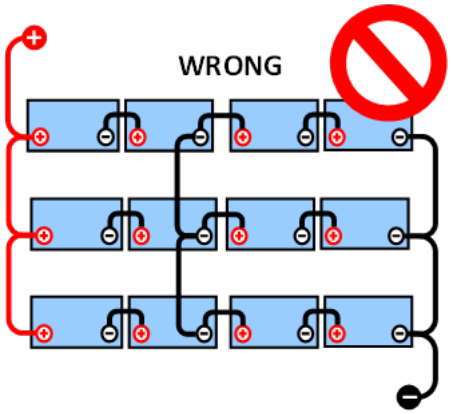

WRONG: *The midpoints are connected and without busbars or midpoint monitoring.*

Due to the voltage drop over the positive and the negative cables the midpoint voltage is not identical.

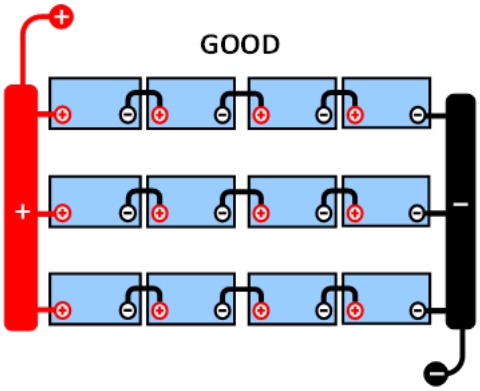

GOOD: *The midpoints are not connected; busbars are used and without midpoint monitoring.*

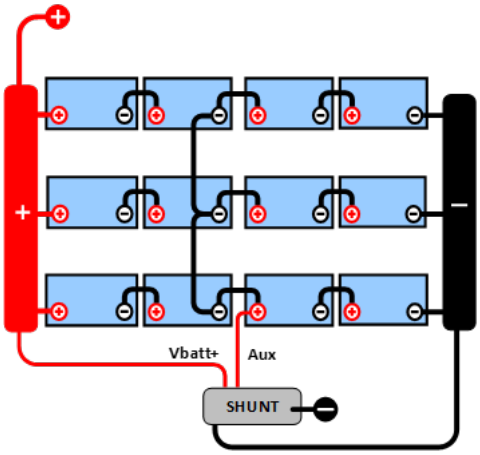

GOOD: *The midpoints are connected, busbars are used and with midpoint monitoring.*

In an unmonitored battery bank the midpoints should not be interconnected, one bad battery bank can go unnoticed and could damage all other batteries.

Always use busbars when applying midpoint voltage monitoring. The cables to the busbars must all have the same length.

Midpoints can only be connected if corrective action is taken in case of an alarm.

9.2. Midpoint deviation calculation

The battery monitor measures the midpoint and then calculates the deviation in a percentage from what the midpoint should be.

$$Deviation = \frac{100 \times (top\ string\ voltage - bottom\ string\ voltage)}{battery\ voltage}$$

$$d = \frac{100 \times (Vt - Vb)}{V}$$

Where:

d is the deviation in %

Vt is the top string voltage

Vb is the bottom string voltage

V is the voltage of the battery (V = Vt + Vb)

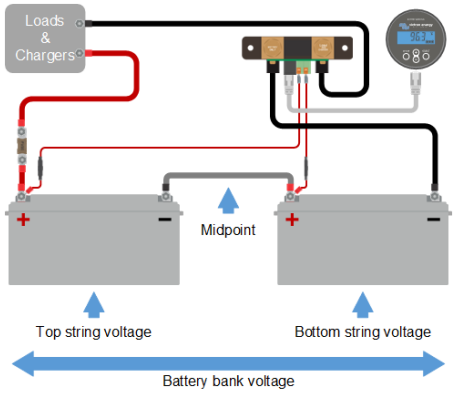

9.3. Setting the alarm level

In case of VRLA (gel or AGM) batteries, gassing due to overcharging will dry out the electrolyte, increasing internal resistance and ultimately resulting in irreversible damage. Flat plate VRLA batteries start to lose water when the charge voltage approaches 15V (12V battery). Including a safety margin, the midpoint deviation should therefore remain below 2% during charging. When, for example, charging a 24V battery bank at 28.8V absorption voltage, a midpoint deviation of 2% would result in:

$$Vt = \frac{V \times d}{100} + Vb = \frac{V \times d}{100} + V - Vt = V \times \frac{1 + \frac{d}{100}}{2}$$

$$Vt = V \times \frac{1 + \frac{d}{100}}{2} \quad and \quad Vb = V \times \frac{1 - \frac{d}{100}}{2}$$

$$Vt = 28.8 \times \frac{1 + \frac{2}{100}}{2} \approx 14.7 \quad and \quad Vb = 28.8 \times \frac{1 - \frac{2}{100}}{2} \approx 14.1$$

Obviously, a midpoint deviation of more than 2% will result in overcharging the top battery and undercharging the bottom battery. These are two good reasons to set the midpoint alarm level at not more than d = 2%.

This same percentage can be applied to a 12V battery bank with a 6V midpoint.

In case of a 48V battery bank consisting of 12V series connected batteries, the % influence of one battery on the midpoint is reduced by half. The midpoint alarm level can therefore be set at a lower level.

9.4. Alarm delay

An alarm delay is in place to prevent the occurrence of alarms during short-term deviations that will not damage a battery. The alarm is triggered when the deviation exceeds the set alarm value for more than 5 minutes. If the deviation exceeds the set alarm value by a factor of two or more, the alarm will trigger after 10 seconds.

9.5. What to do in case of an alarm during charging

In case of a new battery bank the alarm is usually due to differences in the initial state of charge of the individual battery. If the deviation increases to more than 3% you should stop charging the battery bank and charge the individual batteries or cells separately. Another way is to substantially reduce the charge current to the battery bank, this will allow the batteries to equalize over time.

If the problem persists after several charge-discharge cycles do the following:

- In case of series/parallel connection disconnect the midpoint, parallel connection wiring and measure the individual midpoint voltages during absorption charging to isolate batteries or cells which need additional charging.
- Charge and then test all batteries or cells individually.

In case of an older battery bank which has performed well in the past the problem may be due to systematic undercharge. In this case more frequent charging or an equalization charge is needed. Please note that only flooded deep cycle flat plate or OPzS batteries can be equalized. Better and regular charging will solve the problem.

In case there are one or more faulty cells:

- In case of series/parallel connection disconnect the midpoint, parallel connection wiring and measure the individual midpoint voltages during absorption charging to isolate batteries or cells which need additional charging.
- Charge and then test all batteries or cells individually.

9.6. What to do in case of an alarm during discharging

The individual batteries or cells of a battery bank are not identical, and when fully discharging a battery bank, the voltage of some cells will start dropping earlier than others. The midpoint alarm will therefore nearly always trip at the end of a deep discharge.

If the midpoint alarm trips much earlier (and does not trip during charging), some batteries or cells may have lost capacity or may have developed a higher internal resistance than others. The battery bank may have reached the end of service life, or one or more cells or batteries have developed a fault:

- In case of series/parallel connection, disconnect the midpoint parallel connection wiring and measure the individual midpoint voltages during discharging to isolate faulty batteries or cells.
- Charge and then test all batteries or cells individually.

9.7. The Battery Balancer

A consideration can be made to add a Battery Balancer to the system. A Battery Balancer will equalize the state of charge of two series connected 12V batteries, or of several parallel strings of series connected batteries.

When the charge voltage of a 24V battery system increases to more than 27.3V, the Battery Balancer will turn on and compare the voltage over the two series connected batteries. The Battery Balancer will draw a current of up to 0.7A from the battery (or parallel connected batteries) with the highest voltage. The resulting charge current differential will ensure that all batteries will converge to the same state of charge. If needed, several balancers can be paralleled.

A 48V battery bank can be balanced with three Battery Balancers, one between each battery.

For more information see the Battery Balancer product page: https://www.victronenergy.com/batteries/battery-balancer.

10. Troubleshooting

10.1. Functionality issues

10.1.1. Unit is dead

On first connection the display of the head unit should be active.

If this is not the case check the fuse in the +B1 cable and also check the cable itself and its terminals.

In case the temperature sensor is used:

- The temperature sensor M8 cable lug must be connected to the positive pole of the battery bank (the red wire of the sensor doubles as the power supply wire).
- Check the fuse in the positive (red) cable.
- Make sure the correct temperature sensor is used. Note that the MultiPlus temperature sensor is not suitable.
- Make sure the temperature sensor has been connected the right way. The red cable should connect the +B1 terminal and the black wire to the +B2 terminal.

See the Auxiliary connection for temperature monitoring [9] chapter for connection instructions and a wiring diagram.

10.1.2. Auxiliary port not working

Check the fuse in the +B2 cable and also check the cable itself and its terminals.

In case a second battery (starter battery) is monitored:

Make sure the second battery negative is connected to the load side of the battery monitor shunt. See the chapter Auxiliary connection for monitoring the voltage of a second battery [8] for connection instructions and a wiring diagram.

In case the temperature sensor is used:

- The temperature sensor M8 cable lug must be connected to the positive pole of the battery bank (the red wire of the sensor doubles as the power supply wire).
- Check the fuse in the positive (red) cable.
- Make sure the correct temperature sensor is used. The MultiPlus temperature sensor does not work with the battery monitor.
- Make sure the temperature sensor has been connected the right way. The red cable should connect to the +B1 terminal and the black wire to the Aux+B2 terminal.

See the Auxiliary connection for temperature monitoring [9] chapter for connection instructions and a wiring diagram.

10.1.3. Unable to change VictronConnect settings

Settings can only be changed if the battery monitor is running on the most up to date firmware. Update to the latest firmware with the VictronConnect app.

10.2. Connection issues

10.2.1. Cannot connect via Bluetooth

It is highly unlikely that the Bluetooth interface is faulty. Some pointers to try before seeking support:

- Is the battery monitor powered up? The display on the head unit should be active. If not see the Unit is dead [50] chapter.
- Is another phone or tablet already connected to the battery monitor? Only one phone or tablet can be connected to the battery monitor at any given time. Make sure no other devices are connected and try again.
- Is the VictronConnect app up to date?
- Are you close enough to the battery monitor? In an open space, the maximum distance is about 20 meters.
- The shunt and the electric cables do negatively influence the range of the Bluetooth signal. The resulting range of 10-15 meters is however satisfactory in most cases. The proximity of other electrically conducting elements, such as the metal chassis of a vehicle or seawater around the hull of a boat, may reduce the range of the Bluetooth signal to an unacceptable level. The

solution in such a case is to add a VE.Direct Bluetooth Dongle (ASS030536011) to the system, and switch off Bluetooth in the BMV-712 Smart. Be aware that the VE.Direct Bluetooth Dongle will not support stored trends, Bluetooth GATT service and the Keep SOC option.

- Are you using the Windows version of the VictronConnect app? This version is unable to connect via Bluetooth. Use Android, iOS or macOS instead (or use the USB - VE.Direct interface).

For connection issues, see the troubleshooting section of the VictronConnect manual: https://www.victronenergy.com/live/victronconnect:start.

10.2.2. PIN code lost

Note that the PIN code is only applicable when connecting to the battery monitor via Bluetooth.

If you have lost the PIN code you will need to reset the PIN code to its default PIN code, see the Reset PIN code [42] chapter.

More information and specific instructions can be found in the VictronConnect manual: https://www.victronenergy.com/live/victronconnect:start.

10.3. Incorrect readings

10.3.1. Charge and discharge current are inverted

The charge current should be shown as a positive value. For example: 1.45A.

The discharge current should be shown as a negative value. For example: -1.45A.

If the charge and discharge currents are reversed, the negative power cables on the battery monitor must be swapped.

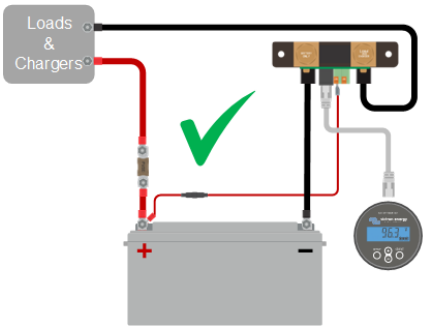

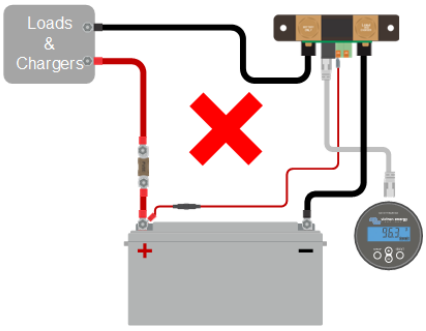

10.3.2. Incomplete current reading

The negatives of all the loads and the charge sources in the system must be connected to the system minus side of the shunt.

If the negative of a load or a charge source is connected directly to the negative battery terminal or the “battery minus” side on the shunt, their current will not flow through the battery monitor and will be excluded from the overall current reading and the state of charge reading.

The battery monitor will display a higher state of charge than the actual state of charge of the battery.

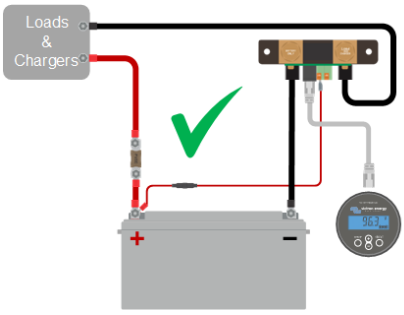

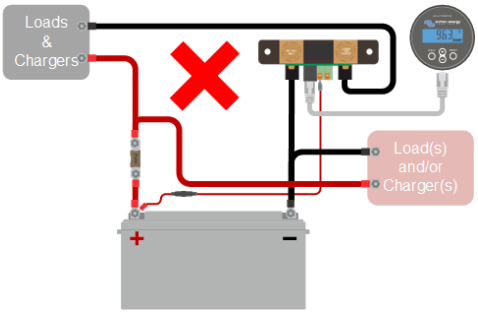

10.3.3. There is a current reading while no current flows

If there is a current reading while no current is flowing through the battery monitor, perform a zero current calibration [31] while all loads are turned off or set the current threshold [30].

10.3.4. Incorrect state of charge reading

An incorrect state of charge can be caused by a variety of reasons.

Incorrect battery settings

The following parameter(s) will have an effect on the state of charge calculations if they have been set up incorrectly:

- Battery capacity.
- Peukert exponent.
- Charge efficiency factor.

Incorrect state of charge due to a synchronisation issue:

The state of charge is a calculated value and will need to be reset (synchronised) every now and then.

The synchronisation process is automatic and is performed each time the battery is fully charged. The battery monitor determines that the battery is fully charged when all 3 "charged" conditions have been met. The "charged" conditions are:

- Charged voltage (Voltage).
- Tail current (% of battery capacity).
- Charge detection time (minutes).

A practical example of the conditions that need to be met before a synchronisation will take place:

- The battery voltage has to be above 14.0V (charged voltage).
- The charge current has to be less than 0.04 x battery capacity (Ah). For a 200Ah battery, this is 0.04 x 200 = 8A (tail current).
- Both above conditions have to be stable for 3 minutes (charged detection time).

If the battery is not fully charged or if the automatic synchronisation does not happen, the state of charge value will start to drift and will eventually not represent the actual state of charge of the battery.

The following parameter(s) will have an effect on automatic synchronisation if they have been set incorrectly:

- Charged voltage.
- Tail current.
- Charged detection time.
- Not occasionally fully charging the battery.

For more information on these parameters see the chapter: "Battery settings".

Incorrect state of charge due to incorrect current reading:

The state of charge is calculated by looking at how much current flows in and out of the battery. If the current reading is incorrect, the state of charge will also be incorrect. See paragraph Incomplete current reading [51].

10.3.5. State of charge is missing

This means that the battery monitor is in an unsynchronised state. This can occur when the battery monitor has just been installed or after it has been unpowered for some time and is being powered up again.

To fix this, fully charge the battery. Once the battery is close to a full charge, the battery monitor should synchronise automatically. If that doesn't work, review the synchronisation settings.

If you know the battery is fully charged but don't want to wait until the battery synchronises, then perform a manual synchronisation, see paragraph Synchronise SoC to 100% [31].

10.3.6. State of charge does not reach 100%

The battery monitor will automatically synchronise and reset the state of charge to 100% as soon as the battery has been fully charged. In case the battery monitor does not reach a 100% sate of charge, do the following:

- Fully charge the battery and check if the battery monitor correctly detects if the battery is fully charged.
- If the battery monitor does not detect that the battery has been fully charged you will need to check or adjust the charged voltage, tail current and/or charged time settings. For more information see Automatic synchronisation [23].

10.3.7. State of charge always shows 100%

One reason could be that the negative cables going in and out of the battery monitor have been wired the wrong way around, see Charge and discharge current are inverted [51].

10.3.8. State of charge does not increase fast enough or too fast when charging

This can happen when the battery monitor thinks the battery is bigger or smaller than in reality. Check if the battery capacity [15] has been set correctly.

10.3.9. Incorrect battery voltage reading

Check if there is an issue with the +B1 cable. Perhaps the fuse, the cable itself or one of the terminals is faulty or there is a loose connection.

Check for incorrect wiring: the +B1 cable has to be connected to the positive of the battery bank, not midway of the battery bank.

In case a temperature sensor is used, make sure the sensor is connected to the positive terminal of the battery bank, not in the middle of the battery bank.

10.3.10. Incorrect auxillary battery voltage reading

If the auxillary (starter) battery voltage is too low:

- Perhaps there is an issue with the +B2 cable, perhaps the fuse, the cable itself or one of the terminals is faulty, or there is a loose connection.

If the auxillary (starter) battery voltage reading is missing:

- Make sure that both batteries share a common negative and that the starter battery negative is connected to the load side of the battery monitor shunt. For instructions on how to correctly wire the starter battery, see Aux connection for monitoring the voltage of a second battery [8].

10.3.11. Synchronisation issues

If the battery monitor does not synchronise automatically, one possibility could be that the battery never reaches a fully charged state. Fully charge the battery and see if the state of charge eventually indicates 100%.

Another possibility is that the charged voltage setting [29] should be lowered and/or the tail current setting [29] should be increased.

It is also possible that the battery monitor synchronises too early. This can happen in solar systems or in systems that have fluctuating charge currents. If this is the case change the following settings:

- Increase the “charged voltage [29]" to slightly below the absorption charge voltage. For example: 14.2V in case of 14.4V absorption voltage (for a 12V battery).
- Increase the “charged detection time [29]” and/or decrease the "tail current [29]" to prevent an early reset due to passing clouds.

11. Technical data

11.1. Technical data

Battery monitor	BMV-712 Smart
Supply voltage range	6.5 - 70 Vdc
Current draw (backlight off)	< 1mA
Input voltage range, auxiliary battery	6.5 - 70Vdc
Battery capacity (Ah)	1 - 9999Ah
Operating temperature range	-40 +50°C (-40 - 120°F)
Measures voltage of second battery, temperature* or midpoint	Yes
Temperature measurement range*	-20 +50°C (-4 - 120°F)
VE.Direct communication port	Yes
Bistable relay	60V / 1A normally open (function can be inverted)
RESOLUTION & ACCURACY (with a 500A shunt)	
Current	± 0.01A
Voltage	± 0.01V
Amp hours	± 0.1Ah
State of charge (0 - 100%)	± 0.1%
Time-to-go	± 1 min
Temperature (0 - 50°C or 30 - 120°F) *	± 1°C/°F
Accuracy of current measurement	± 0.4%
Accuracy of voltage measurement	± 0.3%
INSTALLATION & DIMENSIONS	
Installation	Flush mount
Head unit front diameter	63mm (2.5 inch)
Head unit front bezel	69 x 69mm (2.7 x 2.7 inch)
Shunt connection bolts	M10 (0.3937 inch)
Head unit body diameter and depth	52mm (2.0 inch) and 31mm (1.2 inch)
Head unit protection category	IP55 (not intended for outdoor use)
STANDARDS	
Safety	EN 60335-1
Emission / Immunity	EN 55014-1 / EN 55014-2
Automotive	ECE R10-4 / EN 50498
ACCESSORIES	
Shunt (included)	500A / 50mV
Cables (included)	10 meter 6 core UTP with RJ12 connectors, 1 cable 2 cables with 1A slow blow fuse for the battery positive connection
Temperature sensor	Optional (ASS000100000)

* Only when the optional temperature sensor is connected, the Temperature sensor for BMV-712 Smart and BMV-702. This temperature sensor is not included.

12. Appendix

12.1. Dimensions BMV head unit

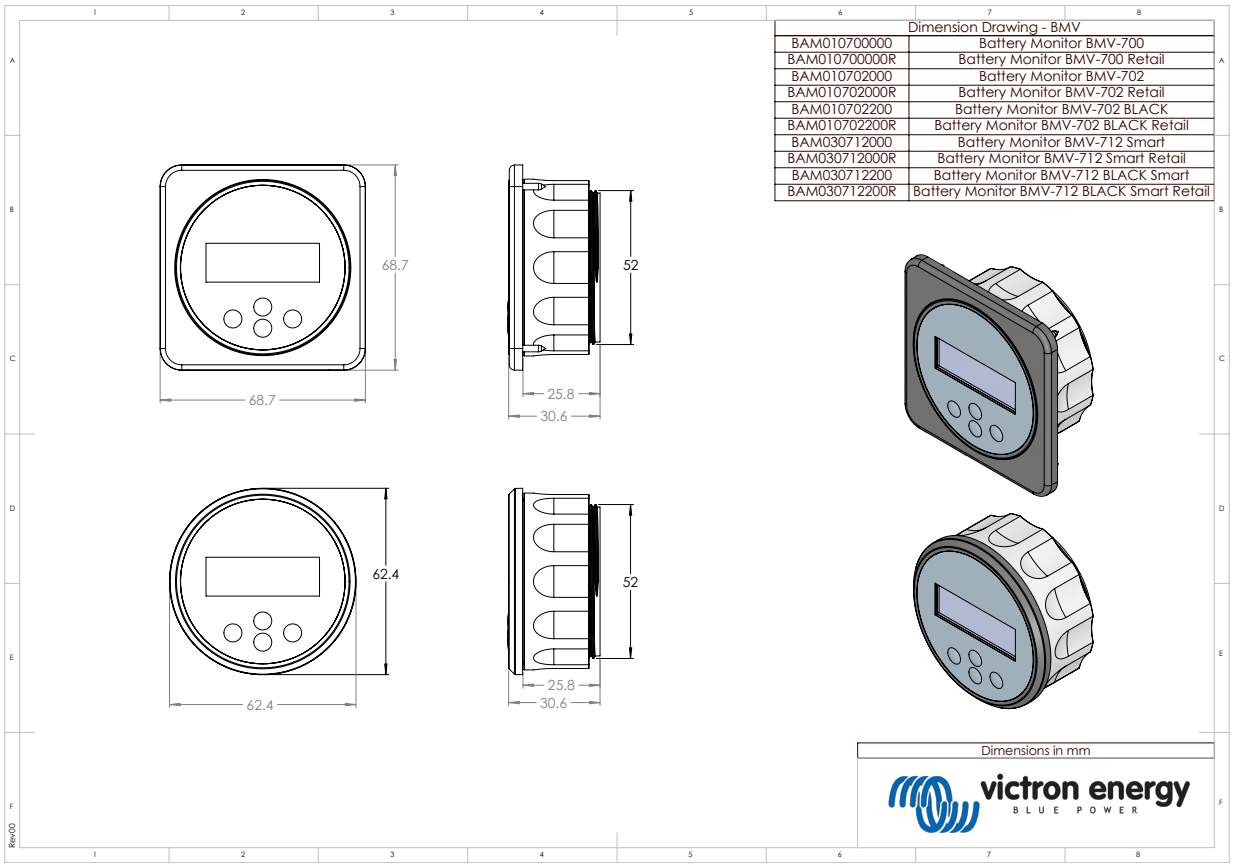

12.2. Dimensions shunt

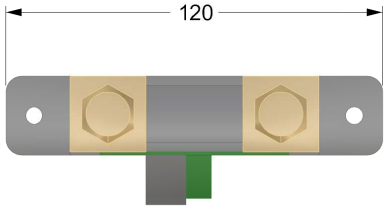

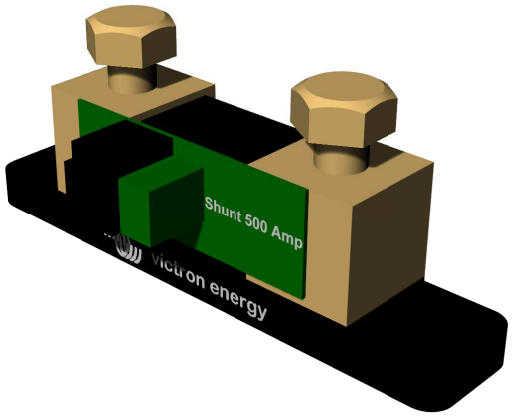

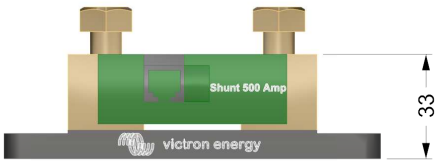

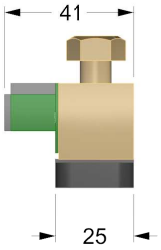

www.victronenergy.com