ENGLISH

# Inverter VE.Direct 230V Manual

HW15 250, 375, 500, 800, 1200, 1600

rev 02 - 01/2026

This manual is also available in HTML5.

# Table of Contents

**1. Safety instructions** ..... **1**

**2. General description** ..... **2**
- 2.1. Inverter ..... 2
- 2.2. ON/OFF/ECO switch ..... 2
- 2.3. LED diagnosis and monitoring ..... 2
- 2.4. The VictronConnect app ..... 3
- 2.5. Bluetooth ..... 3
- 2.6. VE.Direct port ..... 3
- 2.7. Remote on/off control ..... 3

**3. Installation** ..... **4**
- 3.1. Physical installation ..... 4
  - 3.1.1. Location ..... 4
  - 3.1.2. Mounting ..... 4
- 3.2. Electrical installation ..... 5
  - 3.2.1. Connection to the battery ..... 5
  - 3.2.2. AC output connection ..... 6
  - 3.2.3. Chassis to ground connection ..... 6
  - 3.2.4. Remote connector ..... 7
  - 3.2.5. VE.Direct connection ..... 7

**4. Configuration** ..... **8**
- 4.1. AC output voltage and frequency ..... 8
- 4.2. ECO mode and ECO settings ..... 8
- 4.3. Low battery alarm and charge detect settings ..... 8
  - 4.3.1. Dynamic cut off ..... 8
- 4.4. Firmware update ..... 10
- 4.5. Reset settings to default ..... 10

**5. Operation** ..... **11**
- 5.1. Inverter ..... 11
  - 5.1.1. ECO Mode ..... 11
- 5.2. Power and Alarm LED definitions and troubleshooting ..... 11
- 5.3. Protections and automatic restarts ..... 13
- 5.4. Monitoring via the VictronConnect app ..... 14
- 5.5. Monitoring via a GX device, GlobalLink and the VRM portal ..... 15

**6. Technical specifications** ..... **16**
- 6.1. Technical specifications Inverter VE.Direct 230V ..... 16

**7. Appendix** ..... **18**
- 7.1. AC outlet ..... 18
- 7.2. Connection overview ..... 19
- 7.3. Installation information neutral to ground connection ..... 19
- 7.4. Dimensions 250 and 375 models ..... 21
- 7.5. Dimensions 500 models ..... 22
- 7.6. Dimensions 12/800 model ..... 23
- 7.7. Dimensions 24/800 and 48/800 models ..... 24
- 7.8. Dimensions 12/1200 model ..... 25
- 7.9. Dimensions 24/1200 and 48/1200 models ..... 26
- 7.10. Dimensions 12/1600 model ..... 27

# 1. Safety instructions

**General**

Please read the documentation supplied with this product first, so that you are familiar with the safety signs and directions before using the product. This product is designed and tested in accordance with international standards. The equipment should be used for the designated application only.

- **WARNING - These servicing instructions are for use by qualified personnel only. To reduce the risk of electric shock, do not perform any servicing other than that specified in the operating instructions unless you are qualified to do so.**
- **WARNING - ELECTRIC SHOCK HAZARD** - The product is used in conjunction with a permanent energy source (battery). Input and/or output terminals may still be dangerously energized, even when the equipment is switched off. Always disconnect the battery before carrying out maintenance or servicing the product.

- The product has no internal user-serviceable components. Do not remove the front plate or operate the product if any panels have been removed. All servicing must be undertaken by qualified personnel.
- Please read the installation instructions in the installation manual before installing the equipment.
- This is a Safety Class I product (supplied with a protective grounding terminal). The chassis must be grounded. A grounding point is located on the outside of the product. Whenever it is likely that the grounding protection has been damaged, the product must be turned off and secured against unintended operation; please contact qualified service staff.
- The AC output is isolated from the DC input and the chassis **unless the unit is equipped with a Ground Fault Circuit Interrupter (GFCI).** A qualified installer should check this connection since it is necessary for the GFCI to function properly.

  Local regulations may require a true neutral. In this case, one of the AC output wires must be connected to the chassis, **and the chassis must be connected to a reliable ground.** Please note that a true neutral is needed to ensure the correct operation of an earth leakage circuit breaker.
- Ensure that the equipment is used under the correct ambient conditions.

  **Never operate the product in a wet or dusty environment.**

  **Never use the product where there is a risk of gas or dust explosions.**
- Ensure that there is adequate free space (10 cm) for ventilation around the product and check that the ventilation vents are not blocked.
- This appliance is not intended for use by persons (including children) with reduced physical, sensory or mental capabilities, or lack of experience and knowledge unless they have been given supervision or instruction concerning the use of the appliance by a person responsible for their safety.
- Children should be supervised to ensure that they do not play with the appliance.
- Use of an attachment not recommended or sold by the marine unit manufacturer may result in a risk of fire, electric shock, or injury to persons.

**Transport and storage**

Ensure that the mains power and battery leads have been disconnected before storing or transporting the product.

No liability can be accepted for any transport damage if the equipment is shipped in non-original packaging.

Store the product in a dry environment; the storage temperature must be between -4°F and 140°F (-20°C and 60°C).

Consult the battery manufacturer's manual in respect of transport, storage, charging, recharging and disposal of the battery.

# 2. General description

## 2.1. Inverter

**Proven reliability**

The inverter uses a full bridge with toroidal transformer topology that has proven its reliability over many years. It is short circuit proof and protected against overheating, whether due to overload or high ambient temperature.

**High startup power**

To start loads such as: power converters for LED lamps, filament lamps or electric tools.

**AC output socket**

This model inverter is available in different models, each with a different AC output socket, namely: Schuko, UK, AU/NZ or IEC-320 (together with male plug).

**ECO mode**

ECO mode reduces the inverter power consumption by approximately 85% by going into standby operation when there are no loads connected to the inverter. When the inverter has been switched to ECO mode, it will enter standby operation when the load is less than a preset value. While in standby operation, the inverter will check every few seconds if the load has increased again. If the load has increased, the inverter will leave standby operation and resumes regular inverter operation. The sensitivity of the ECO mode is configurable.

**Fully configurable**

- AC output voltage and frequency.
- Low battery voltage cut-off and restart levels.
- ECO mode on/off and ECO mode sensitivity level.

**To transfer the load to another AC source: The automatic transfer switch**

For inverters we recommend our Filax2 automatic transfer switch. The Filax2 features a very short switchover time (less than 20 milliseconds) so that computers and other electronic equipment will continue to operate without disruption. Alternatively use an inverter/charger with built-in transfer switch.

## 2.2. ON/OFF/ECO switch

The inverter is equipped with a 3-way switch that performs the following functions:

- ON - Switches the inverter on.
- OFF - Switches the inverter off.
- ECO - Switches the inverter to ECO mode.

## 2.3. LED diagnosis and monitoring

The inverter indicates basic operational information and alarms via its LEDs:

- Inverter state.
- Overload warning or alarm.
- Over temperature warning or alarm.
- Low battery voltage warning or alarm.
- High DC ripple warning or alarm.

Additional parameters can be monitored via VictronConnect:

- Inverter state.
- Battery voltage.
- AC output voltage.

- Percentage of nominal AC load.
- Warning and alarms.

For the full list of all LED indications and monitoring parameters, see the Operation [11] chapter.

## 2.4. The VictronConnect app

The VictronConnect app is used to monitor, control and configure the inverter. The app can be installed on a phone, tablet or computer. The app is available for Android, iOS, Windows and macOS. The app either communicates via Bluetooth or via USB interface to the VE.Direct port.

For more information about the app and to download the app, see the VictronConnect product page.

## 2.5. Bluetooth

The inverter does not have built-in Bluetooth. To be able to communicate via Bluetooth use the (optional) VE.Direct Bluetooth Smart dongle.

Bluetooth (but also a VE.Direct connection) can be used to communicate with the VictronConnect app.

## 2.6. VE.Direct port

The inverter is equipped with a VE.Direct port. This port can be used to connect the inverter to:

- The VictronConnect app via a VE.Direct to USB interface.
- The VictronConnect app via a VE.Direct Bluetooth Smart dongle.
- A GX monitoring device, such as the Cerbo GX. Note that an additional VE.Direct cable is needed for this.
- The GlobalLink 520. Note that an additional VE.Direct cable is needed for this.

## 2.7. Remote on/off control

The inverter can be remotely turned on or off in the following ways:

- Via the VictronConnect app.
- With an (optional) external switch connected to the remote connector.
- With the (optional) Inverter Control VE.Direct panel connected to the remote connector.
- From a BMS (Battery Management System) connected to the remote connector.
- Via a GX device and/or the VRM portal (optional).

For more information see the Remote connector [7] chapter.

# 3. Installation

- This product should be installed by a qualified electrician.
- During installation ensure that the remote connector with wire bridge is removed (or switch off the remote on/off switch if installed) to be sure that the inverter cannot be switched on unexpectedly.

## 3.1. Physical installation

For a dimension drawing of the inverter, see the Appendix [18] of this manual.

### 3.1.1. Location

To ensure a trouble free operation of the inverter, it must be used in locations that meet the following requirements:

- Avoid any contact with water. Do not expose the inverter to rain or moisture.
- Install the inverter in a dry and well-ventilated area.
- For best operating results, the inverter should be mounted on a flat surface.
- Mount as close as possible to the batteries. Try and keep the distance between the product and the battery to a minimum in order to minimize cable voltage losses.
- There should be a clear space of at least 10cm around the appliance for cooling. Do not obstruct the airflow around the inverter. When the inverter is running too hot, it will shut down. When the inverter has reached a safe temperature level, the unit will automatically restart again.
- Do not place the unit in direct sunlight. The ambient air temperature should be between -40°F and 149°F (-40°C and 65°C) (humidity <95% non-condensing). Note that in extreme situations the inverter's case temperature can exceed 158°F (70°C).

- Excessive high ambient temperature will result in a reduced service life, reduced peak power rating or shutdown of the inverter.
- Never mount the inverter directly above the batteries.
- For safety purposes, this product should be installed in a heat resistant environment if it is used with equipment where a substantial amount of power is to be converted. Prevent the presence of e.g. chemicals, synthetic components, curtains or other textiles, etc., in the immediate vicinity.

### 3.1.2. Mounting

Mount the inverter against a sturdy wall or horizontally on a suitable ground surface.

Mount the inverter with four screws vertically up- or downwards or horizontally up- or downwards. See the table and figure below for the best mounting options.

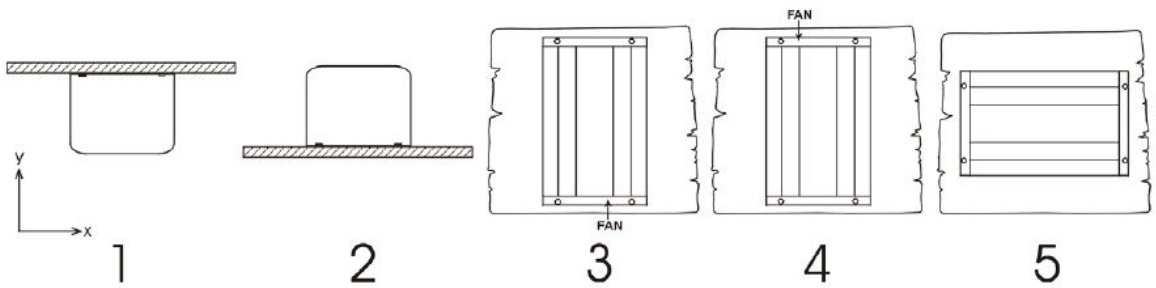


*Mounting directions.*

| # | Mounting type | Recommended? | IP rating | Notes |
|---|---|---|---|---|
| 1 | Ceiling mounting (inverted). | No | n/a | |
| 2 | Base mounting | Yes | IP21 | |

| # | Mounting type | Recommended? | IP rating | Notes |
|---|---|---|---|---|
| 3 | Vertical wall mounting, fan at the bottom. | Yes | IP20 | Be aware that potentially small objects or dust can fall into the inverter through the ventilation openings at the top. |
| 4 | Vertical mounting, fan on top. | No | n/a | |
| 5 | Horizontal wall mounting. | Yes | IP20 | |

## 3.2. Electrical installation

For a connection overview drawing of the inverter, see appendix Connection overview [19].

### 3.2.1. Connection to the battery

In order to fully utilize the full capacity of the inverter, it is important to use batteries with sufficient capacity and battery cables with sufficient cross section.

The inverter is fitted with an internal DC fuse. If the battery cable length is more than 1.5m, an additional fuse or DC circuit breaker must be added to the battery cable, located close to the battery.

See below table for the recommended battery cable cross section and internal fuse information for each inverter model.

| Inverter model | Cable cross section 0-1.5m | Cable cross section 1.5-3m | Internal fuse | Fuse replaceable? |
|---|---|---|---|---|
| **12/250** | 4mm² | 6mm² | 2 x 30A, 32V, ATOF | No |
| **24/250** | 2.5mm² | 4mm² | 30A, 32V ATOF | No |
| **48/250** | 1.5mm² | 2.5mm² | 25A, 80V, FKS | No |
| **12/375** | 6mm² | 10mm² | 2 x 40A, 32V ATOF | No |
| **24/375** | 4mm² | 6mm² | 40A, 32V ATOF | No |
| **48/375** | 2.5mm² | 4mm² | 25A, 80V, FKS | No |
| **12/500** | 6mm² | 10mm² | 3 x 35A, 32V, ATOF | No |
| **24/500** | 6mm² | 10mm² | 2 x 30A, 32V, ATOF | No |
| **48/500** | 4mm² | 6mm² | 30A, 80V, FKS | No |
| **12/800** | 16mm² | 25mm² | 150A, 32V, MIDI | Yes |
| **24/800** | 6mm² | 10mm² | 80A, 32V, MIDI | Yes |
| **48/800** | 4mm² | 6mm² | 40A, 58V, MIDI | Yes |
| **12/1200** | 25mm² | 35mm² | 200A, 32V MIDI | Yes |
| **24/1200** | 10mm² | 16mm² | 100A, 32V MIDI | Yes |
| **48/1200** | 6mm² | 10mm² | 50A, 58V, MIDI | Yes |
| **12/1600** | 35mm² | 50mm² | 250A, 32V, MEGA | Yes |
| **24/1600** | 16mm² | 25mm² | 150A, 32V, MIDI | Yes |
| **48/1600** | 10mm² | 16mm² | 80A, 58V, MIDI | Yes |

Sufficient cable thickness and appropriately sized batteries are important factors. Please consult your supplier or see the relevant sections of our books: Energy Unlimited and Wiring Unlimited, both downloadable from our website.

**Battery connection procedure**

- Use insulated tools in order to avoid shorting the battery terminals.
- Avoid shorting the battery cables.

Proceed as follows to connect the battery cables:

- Be aware that reverse polarity connection of the battery cables (+ to – and – to +) will cause damage to the inverter.
- Connect the battery cables to the + (red) and the - (black) battery terminals.

- Secure the battery connections firmly to minimise contact resistance. Refer to the recommended torque values in the table below:

| Inverter model | Maximum cable cross section (mm²) | Maximum cable cross section (AWG) | Recommended torque (Nm) | Recommended torque (Lb.in) |
|---|---|---|---|---|
| **12/250** | 10mm² | 8 AWG | 1.2Nm | 11 Lb.in |
| **24/250** | 10mm² | 8 AWG | 1.2Nm | 11 Lb.in |
| **48/250** | 10mm² | 8 AWG | 1.2Nm | 11 Lb.in |
| **12/375** | 10mm² | 8 AWG | 1.2Nm | 11 Lb.in |
| **24/375** | 10mm² | 8 AWG | 1.2Nm | 11 Lb.in |
| **48/375** | 10mm² | 8 AWG | 1.2Nm | 11 Lb.in |
| **12/500** | 10mm² | 8 AWG | 1.2Nm | 11 Lb.in |
| **24/500** | 10mm² | 8 AWG | 1.2Nm | 11 Lb.in |
| **48/500** | 10mm² | 8 AWG | 1.2Nm | 11 Lb.in |
| **12/800** | 25 mm² | 4 AWG | 2Nm | 18 Lb.in |
| **24/800** | 16 mm² | 6 AWG | 2Nm | 18 Lb.in |
| **48/500** | 16 mm² | 6 AWG | 2Nm | 18 Lb.in |
| **12/1200** | 35mm² | 2 AWG | 4.3Nm | 38 Lb.in |
| **24/1200** | 25mm² | 4 AWG | 2Nm | 18 Lb.in |
| **48/1200** | 25mm² | 4 AWG | 2Nm | 18 Lb.in |
| **12/1600** | 50 mm² | 1/0 AWG | 4.3Nm | 38 Lb.in |
| **24/1600** | 25mm² | 4 AWG | 2Nm | 18 Lb.in |
| **48/1600** | 25mm² | 4 AWG | 2Nm | 18 Lb.in |

### 3.2.2. AC output connection

Depending on the inverter model, the inverter is equipped with any of the following AC outlets:

- Schuko (CEE 7/4).
- IEC-320 (male plug included).
- UK (BS 1363).
- AU/NZ (AS/NZS 3112).

For a photo of the AC outlet type, see appendix AC outlet [18].

The inverter does not have a fuse in the AC output. The AC cabling is protected by a fast-acting current limiter in case of a short circuit and an overload detection mechanism which mimics the characteristics of a fuse (i.e. faster shutdown with larger overload). It is important to size your wiring properly, based on the inverter's power rating.

Never connect the AC output of the inverter to another AC source, such as a household AC wall outlet or a generator.

- The inverter has a floating ground. To ensure proper functioning of a GFCI (or RCCB, RCB or RCD) to be installed in the AC output circuit of the Inverter, an internal or external neutral to ground connection needs to be made. For more information see appendix Installation information neutral to ground connection [19].

### 3.2.3. Chassis to ground connection

**Wire size for connecting the inverter chassis to ground:**

The earth conductor from the earth lug on the chassis to ground should have at least half the cross-section of the conductors used for the battery connection.

The maximum conductor size that fits the earth lug is 25 mm². Use the table below to find the correct cross-section for the earth conductor.

The AC output is isolated from the DC input and the chassis . Local regulations may require a true neutral. For instructions, see appendix Installation information neutral to ground connection [19].

### 3.2.4. Remote connector

Remote on/off control of the inverter can be achieved with a simple on/off switch connected to the inverter remote connector.

The inverter will switch on when it has been switched to ON or ECO mode via the ON/OFF/ECO switch and when:

- Contact is made between the remote connector H (left) terminal and L (right) terminal, for example via the wire bridge, a switch or the Inverter control panel.
- Contact is made between the remote connector H (left) terminal and battery positive.
- Contact is made between the remote connector L (right) terminal and battery negative.

Some usage examples of the remote connector are:

- If the inverter is situated in a vehicle and is only allowed to operate when the engine is running. Connect the remote connector H (right) terminal to the vehicle ignition switch.
- If the inverter is connected to a lithium battery the inverter can be controlled by the lithium battery BMS.

- For safety purposes, the inverter can be turned off completely by removing the remote connector. Do this by pulling the remote connector out of its socket. This ensures that the inverter cannot be turned on anymore via its switch or Bluetooth. The user can now be certain that the inverter is definitely turned off and it cannot be accidentally turned back on by another user.

#### Inverter control panel

If a Inverter Control VE.Direct panel is used, it needs to be connected to the inverter remote connector as is indicated in below image. Note that the connection is polarity dependent for proper operation.

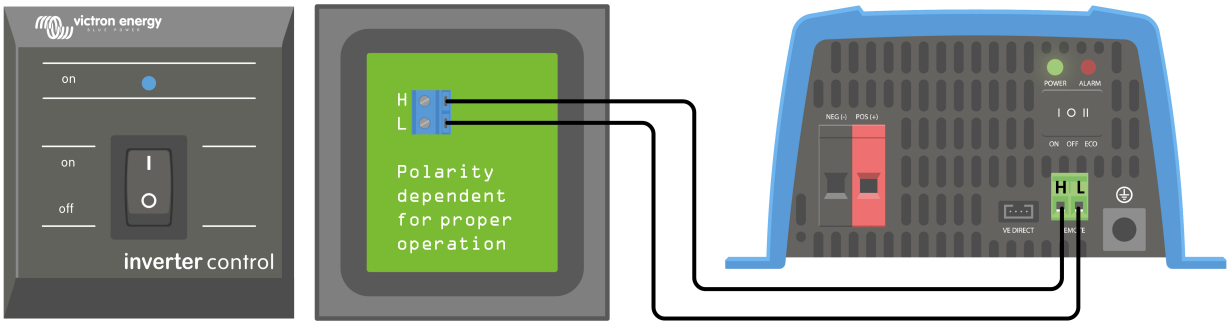


### 3.2.5. VE.Direct connection

The VE.Direct connection can be used for monitoring of the inverter via a GX device, or to connect to the VictronConnect app.

The following items can be connected:

- A GX device or GlobalLink 520 using a VE.Direct cable.
- A GX device using a VE.Direct to USB interface.
- A computer running the VictronConnect app using the VE.Direct to USB interface.
- A phone or tablet running the VictronConnect app using the VE.Direct Bluetooth Smart dongle.

# 4. Configuration

The inverter is ready for use with the standard factory settings (see the Technical specifications [16] chapter).

The inverter can be configured using the VictronConnect app. Connect using a smartphone or tablet via Bluetooth (VE.Direct to Bluetooth Smart dongle needed) or using a computer via USB and a VE.Direct to USB interface).

- Settings may only be changed by a qualified engineer.
- Carefully read the instructions before changes are made.

## 4.1. AC output voltage and frequency

The inverter is set by default at 230Vac 50Hz.

The AC output voltage and frequency can be set to different values according to the table below.

## 4.2. ECO mode and ECO settings

The inverter is equipped with ECO mode. ECO mode is activated via the VictronConnect appor the inverter main switch.

When the inverter is in ECO mode, it will reduce its power consumption by approximately 85% when there are no loads connected to the inverter.

When the inverter is in ECO mode, the inverter will switch to search state when there is no load or a very low load. While in the search state, the inverter is off and will switch on every 3 seconds for a short period (adjustable). If the inverter detects a certain size load (adjustable) the inverter will go back to normal operation mode. Once the load drops below a certain level, the inverter will go back to ECO mode.

Below table indicates the default settings and setting range of the ECO parameters:

| Parameter | Default value | Range |
|---|---|---|
| Wake-up minimum power | 15W | 15W - inverter rating |
| ECO mode search interval | 3s | 0 - 64s |
| ECO mode search time | 0.16s | 0.08 - 5.00s |

- Note that the required ECO mode settings are heavily dependent on the type of load: inductive, capacitive, non-linear. Adjustment for specific loads may be needed.

## 4.3. Low battery alarm and charge detect settings

The inverter has two different types of low battery shutdown modes:

- Low battery shutdown based on battery voltage. This is the "low battery shutdown" voltage.
- Low battery shutdown based on battery voltage as a function of battery load. This mode is disabled by default. See next chapter Dynamic cut off [8] for more information.

Once the inverter has shut down due to a low battery (regardless of the mode):

- The inverter will restart again once the battery voltage has increased above the "low battery restart and alarm" level.
- The inverter will clear the low battery alarm once it detects the battery is being charged. This is the "charge detect" voltage.

| Battery voltage | Low battery shutdown | Low battery restart & alarm | Charge detect |
|---|---|---|---|
| 12V | Default: 9.3V<br>Range: 0-100V | Default: 10.9V<br>Range: 0-100V | Default: 14V<br>Range: 0-100V |

### 4.3.1. Dynamic cut off

The "Dynamic cut off" feature makes the low battery shutdown protection a function of the battery current drawn from the battery in relation to the battery voltage.

When a high current is being drawn from the battery, a lower cut off voltage threshold is being used, for example 10V. And similarly, when the battery is only being discharged slowly, a high cut off voltage is used, for example 11.5V.

In this way, a voltage drop, caused by the internal resistance in the battery, is compensated so that the battery voltage becomes a much more reliable parameter to decide when to stop discharging the battery.

The "Dynamic cut off" feature is most useful for batteries with a high internal resistance, like OPzV and OPzS batteries. It is a bit less relevant for GEL and AGM batteries and perhaps even irrelevant for lithium batteries. The below graph shows the discharge ratio versus battery voltage curve for the different battery types. You can see that the lithium curve (LiFePO4) is nearly flat compared to the OPzV and OPzS curve.

The curve can be adjusted in the VictronConnect app.

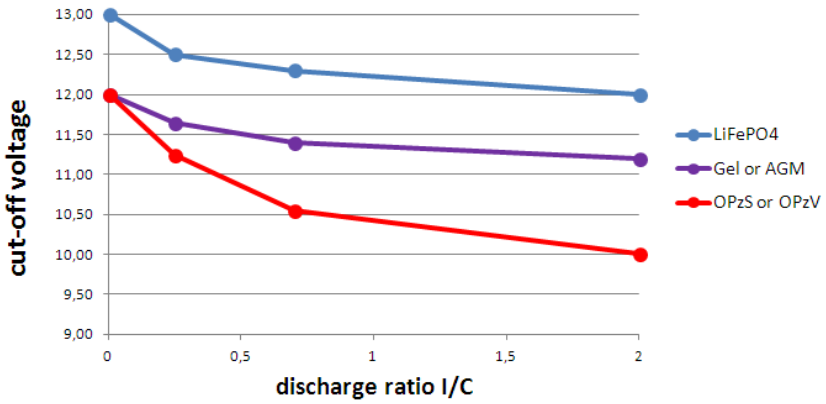


*Discharge ratio versus battery voltage graph for different 12V battery types (for a 24V multiply by 2 and for a 48V multiply by 4).*

- Do not use the "Dynamic cut off" feature in an installation that also has other loads connected to the same battery. In these systems the battery voltage might drop because of other loads connected to the battery. The dynamic cut off algorithm in the inverter can not take those other loads into consideration and will shut down the Inverter too early with an under voltage alarm.

**VictronConnect settings**

- The "Dynamic cut off" feature is disabled by default.
- Enable the "Dynamic cut off" feature to use and configure it.
- Select the battery type. Choose between: OPzV/OPzS, GEL/AGM, LiFePO4 or Custom.
- Enter the battery capacity.
- Enter the voltage for the various discharge currents. These values have already been set to the generic voltages that belong to the specific battery type that was selected earlier. Change these settings only in case they need adjustment and you know what you are doing, or in case a custom battery is being used.

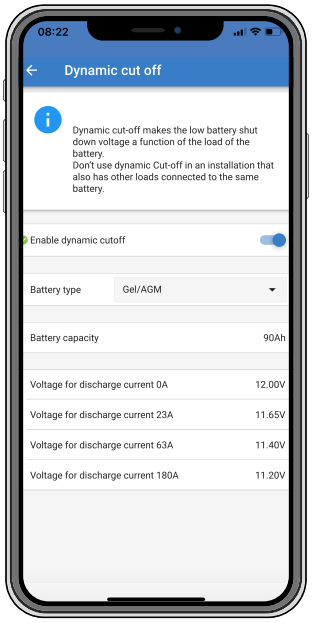


*VictronConnect app showing the "Dynamic cut off" settings*

## 4.4. Firmware update

The firmware can be updated in the inverter product settings:

- Navigate to the inverter settings by clicking on the cog ⚙ symbol in the right top corner.
- Click on the 3 dot ⋮ symbol in the right top corner.
- Choose "Product settings" from the menu.
- The firmware section will display the firmware version and a button to perform a firmware update.

## 4.5. Reset settings to default

The inverter settings can be set to default in the following way:

- Navigate to the inverter settings by clicking on the cog ⚙ symbol in the right top corner.
- Click on the 3 dot ⋮ symbol in the right top corner.
- Select "Reset to defaults" from the menu and the settings will reset to default.

# 5. Operation

## 5.1. Inverter

The inverter can be turned on via these methods:

- ON/OFF/ECO switch.
- The VictronConnect app.
- Remote terminal with wire loop.
- Remote switch connected to the remote terminal (optional).
- Inverter Control VE.Direct panel connected to the remote terminal (optional).
- A GX device and the VRM portal (optional).

### 5.1.1. ECO Mode

The inverter can be switched to ECO mode, via the VictronConnect app or the "ON/OFF/ECO" switch.

When the inverter is running in ECO mode it reduces power consumption in no-load (standby) operation. The inverter will automatically switch off as soon as it detects that there is no load connected. It then switches on, briefly, every 3 seconds to detect a load. If the output power exceeds the set level, the inverter will continue to operate.

For more information about ECO mode, see the ECO mode and ECO settings [8] chapter.

## 5.2. Power and Alarm LED definitions and troubleshooting

| LEDs | LED behaviour | Operational mode | Troubleshooting |
|---|---|---|---|
| | Green POWER LED off.<br>Red ALARM LED off. | The inverter has been switched off, either directly or via its remote on/off connector, or the inverter is not powered. | Check the ON/OFF/ECO switch: it should be in ON position or in ECO position.<br>To check if the inverter is operational, turn the switch to OFF and then to ON.<br>If not operational, check the following:<br>• Check the remote on/off connector. Is the wire loop in place or is the remote switch or remote panel switched on?<br>• Check the DC cable connections and external fuses. Do you measure battery voltage at the inverter battery connection?<br>• If the internal fuse is blown, the inverter has to be returned for service. |
| | Green POWER LED on.<br>Red ALARM LED off. | The inverter has been switched on and is operational. | n/a |

| LEDs | LED behaviour | Operational mode | Troubleshooting |
|---|---|---|---|
| | Green POWER LED blinking slow with a short pulse.<br>Red ALARM LED off. | The inverter has been switched to ECO mode and is in "search" state. In other words, the inverter load is lower than the "Wake up power" setting. the inverter sends a search pulse at regular intervals to check if a load has been connected or has been turned on. | If the inverter keeps switching on and off while there is a load connected, the load may be too small compared to the actual ECO mode settings. Either increase the load or change the "wake up power" setting. |
| | Green POWER LED on.<br>Red ALARM LED on. | Overload warning.<br>The inverter is indicating that the AC load is larger than the inverter rating and that if this situation continues, the inverter will switch off due to an overload alarm | Reduce the AC load |
| | Green POWER LED blinking with a fast double pulse.<br>Red ALARM LED on. | Overload alarm.<br>The inverter has shut down due to prolonged overload and will no longer automatically restart. | Remove the cause of the overload and then restart the inverter by switching it off and then back on again.<br>For more information also see the Protections and automatic restarts [13] chapter. |
| | Green POWER LED on.<br>Red ALARM LED blinking slow. | Low battery voltage warning.<br>The battery voltage has dropped below the "Low battery alarm" voltage. Should the battery voltage drop any further, the inverter will switch off on a "Low battery voltage alarm". | Charge the battery and/or turn AC loads off. Also check if all battery cable connections have been tightened. Do the battery cables have a sufficient thickness, is the battery full and is the battery still in good working order? |
| | Green POWER LED on.<br>RED ALARM LED blinking fast. | High Battery voltage warning.<br>The battery voltage is too high. Should the battery voltage increase any further, the inverter will switch off on a "High battery voltage alarm". | Reduce the DC input voltage, check if the battery voltage is correct and if the battery bank is wired correctly. Also check if there perhaps are faulty or incorrect chargers or equipment with a faulty charge regulator. |
| | Green POWER LED on.<br>Red ALARM LED blinking with a fast double pulse. | High temperature warning.<br>The internal temperature is too high. If the temperature increases any further, the inverter will switch off on a "High temperature alarm". | Reduce the AC load and/or move the inverter to a better ventilated area. |
| | Green POWER LED on.<br>Red ALARM LED blinking with a fast single pulse at longer intervals. | High DC ripple warning.<br>The DC voltage has a too high ripple voltage. If the ripple voltage increases any further, the inverter will switch off on a "High DC ripple alarm". | Check if all battery cable connections have been tightened. Do the battery cables have a sufficient thickness? DC ripple is related to a voltage drop over the battery cables. For more information on DC ripple and how to prevent it, see the Wiring Unlimited book. |
| | Green POWER LED blinking with a fast double pulse.<br>Red ALARM LED blinking slow. | Low battery voltage alarm.<br>The inverter has shut down due to low battery voltage. | To restart the inverter, charge the battery or switch the inverter off and then back on again.<br>Check the battery voltage at the battery terminals of the inverter. Also check the DC fuses, cables, and cable connections<br>For more information also see the Protections and automatic restarts [13] chapter. |

| LEDs | LED behaviour | Operational mode | Troubleshooting |
|---|---|---|---|
| | Green POWER LED blinking with a fast double pulse.<br>RED ALARM LED blinking fast. | High battery voltage alarm.<br>The inverter has shut down due to high battery voltage. | Reduce the DC input voltage, check if the battery voltage is correct and if the battery bank is wired correctly. Also check if there perhaps are faulty or incorrect chargers or equipment with a faulty charge regulator.<br>The inverter will automatically turn back on when the battery voltage has dropped to an acceptable level.<br>For more information also see the Protections and automatic restarts [13] chapter. |
| | Green POWER LED blinking with a fast double pulse.<br>Red ALARM LED blinking with a fast double pulse. | High temperature alarm.<br>The inverter has shut down due to high temperature. | Wait until the inverter has cooled down.<br>The inverter will automatically turn back on when its internal temperature has dropped to an acceptable level.<br>Check the environment of the inverter, can the ventilation be improved, or can the inverter be moved to a cooler location?<br>For more information also see the Protections and automatic restarts [13] chapter. |
| | Green POWER LED blinking with a fast double pulse.<br>Red ALARM LED blinking with a fast single pulse at longer intervals. | DC ripple alarm.<br>The inverter has shut down due to high DC ripple. | Check if all battery cable connections have been tightened. Do the battery cables have a sufficient thickness? DC ripple is related to a voltage drop over the battery cables. For more information on DC ripple and how to prevent it, see the Wiring Unlimited book.<br>To restart the inverter switch the inverter off and then back on again.<br>For more information also see the Protections and automatic restarts [13] chapter. |
| | Green POWER LED and red ALARM LED blinking fast in an alternating fashion. | Firmware update active. | Wait until the update has been finalized.<br>If the firmware update fails retry the firmware update. |
| | Green POWER LED and red ALARM LED blinking slow in an alternating fashion. | Calibration or parameter error. | Contact your Victron supplier for support. |

## 5.3. Protections and automatic restarts

**Overload**

Some loads like motors or pumps draw large inrush currents in a start-up situation. In such circumstances, it is possible that the start-up current exceeds the over current trip level of the inverter. In this case the AC output voltage will quickly decrease to limit the output current of the inverter. If the over current trip level is continuously exceeded, the inverter will shut down, wait 30 seconds and then restart.

After 3 restarts, followed by another overload within 30 seconds of restarting, the inverter will shutdown and remain off. The LEDs will signal shutdown due to overload. To restart the inverter, switch it off and than back on again.

**Low battery voltage (adjustable)**

The inverter will shut down when the DC input voltage drops below the "Low battery shutdown" parameter. The LEDs will signal shutdown due to low battery. The inverter will automatically restart, after a minimum delay of 30 seconds, when the battery voltage has increased above the "Low battery restart" parameter.

After three restarts, followed by another low battery shutdown within 30 seconds of restarting, the inverter will shutdown and remain off. The LEDs will signal shutdown due to low battery. To restart the inverter, switch it off, and then on again. Alternatively,

recharge the battery. The inverter will automatically restart when the battery voltage has increased for at least 30 seconds above the "Charge detect" parameter.

See the Technical specifications [16] chapter for default low battery shutdown and restart levels. The levels can be customized via the VictronConnect app.

Alternatively, a dynamic low battery cut off can be implemented. For more information, see the Dynamic cut off [8] chapter.

**High battery voltage**

The inverter will shut down when the DC input voltage is too high. The LEDs will signal shutdown due to high battery. The inverter will first wait 30 seconds and will only resume operation once the battery voltage has dropped to an acceptable level.

Check for faulty battery chargers, alternators or solar chargers connected to the battery.

**High temperature**

The inverter will shut down if it detects a too high internal temperature. The LEDs will signal shutdown due to high temperature. The inverter will wait 30 seconds and will only resume operation when the temperature has dropped to an acceptable level.

High temperature alarms are generally caused by a too high ambient temperature, often in combination with a high inverter load. Check if the area the inverter is used in, is well ventilated and perhaps even air-conditioned.

**High DC ripple**

The inverter will shut down if it detects a too high DC ripple. The LEDs will signal shutdown due to high DC ripple. The inverter will wait 30 seconds and then resumes operation again. If after 3 restarts, the DC ripple voltage is still too high, the inverter will shutdown and will not attempt to restart again. To restart the inverter, switch it off and then switch it on again.

High DC ripple is usually caused by loose DC cable connections and/or too thin DC wiring. To clear or prevent ripple alarms, check the wiring between the battery and the inverter. Check if the wiring is the recommended thickness, that all connections are tightened correctly and that the fuses and battery isolators are in good working order. For more information on DC ripple see the Wiring Unlimited book.

Continuous high DC ripple reduces the life expectancy of the inverter.

## 5.4. Monitoring via the VictronConnect app

The VictronConnect app can be used to monitor the inverter.

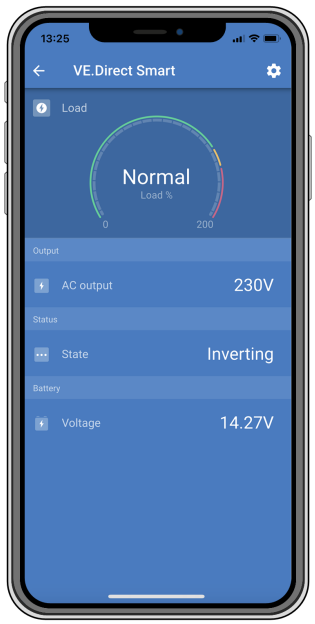


*VictronConnect app.*

For information on how to connect see the The VictronConnect app [3] chapter and/or the VictronConnect manual which can be found on the VictronConnect app information page.

The VictronConnect app will display the following information:

- Inverter load as a percentage of the inverter rating.
- AC output voltage.
- Battery voltage.

- Operational state.
- Warning or alarm messages *.

*) Please note that the app is not active in the background. This means that the app will not send alarms or warnings to your phone unless the app is active in the foreground.

## 5.5. Monitoring via a GX device, GlobalLink and the VRM portal

The inverter can be connected to a GX device, like a Cerbo GX or an Ekrano GX. When connected the GX device will display the inverter on the system overview screen and the device list. The GX device will also display a message in case of an inverter warning or alarm.

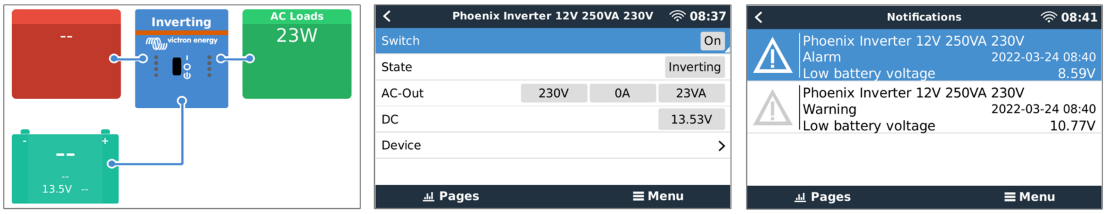


*Example of GX screens from left to right: system screen, inverter device screen and an alarm message.*

If the GX device is connected to the internet, the inverter can be remotely monitored via the VRM portal. For more information on the VRM portal, see the VRM - Remote monitoring information page.

Alternatively, the inverter can be connected to a GlobalLink 520, and then remotely monitored via the VRM portal.

# 6. Technical specifications

## 6.1. Technical specifications Inverter VE.Direct 230V

| Inverter VE.Direct 230V | 12/250<br>24/250<br>48/250 | 12/375<br>24/375<br>48/375 | 12/500<br>24/500<br>48/500 | 12/800<br>24/800<br>48/800 | 12/1200<br>24/1200<br>48/1200 | 12/1600<br>24/1600<br>48/1600 |
|---|---|---|---|---|---|---|
| Continuous power at 25°C | 250W | 375W | 450W | 800W | 1150W | 1450W |
| Continuous power at 40°C | 200W | 300W | 380W | 650W | 1000W | 1300W |
| Time-limited power (cold start) | 300W/15s | 450W/10s | 500W/1h | 900W/1h | 1200W/1h | 1600W/1h |
| Peak power | 400W/2s | 600W/2s | 750W/3s | 1200W/15s | 1600W/15s | 2100W/15s |
| Output AC voltage | 230V +/- 3% | | | | | |
| Output AC frequency (adjustable) | 50 or 60Hz +/- 0.1% | | | | | |
| Input DC voltage range | 9.2 - 17V<br>18.4 - 34V<br>36.8 -62V | | | | | |
| Low battery shutdown DC voltage (adjustable) | 9.3V<br>18.6V<br>37.2V | | | | | |
| Dynamic (load dependent) DC low shut down (fully configurable) | Yes, see the Dynamic cut off [8] chapter. | | | | | |
| Low battery restart & alarm DC voltage (adjustable) | 10.9V<br>21.8V<br>43.6V | | | | | |
| Battery charged detect DC voltage (adjustable) | 14.0V<br>28V<br>56V | | | | | |
| Max. efficiency | 84%<br>86%<br>86% | 86%<br>88%<br>88% | 86%<br>88%<br>88% | 90%<br>90%<br>91% | 91%<br>91%<br>92% | 91%<br>91%<br>92% |
| Zero-load power | 5W<br>6W<br>8W | 6W<br>7W<br>9W | 7W<br>8W<br>10W | 8W<br>8W<br>9W | 11W<br>11W<br>12W | 14W<br>14W<br>15W |
| Default zero-load power in ECO mode (default search interval: 2.5s, adjustable) | 1W<br>1W<br>2W | 1W<br>1W<br>2W | 1W<br>1W<br>2W | 1W<br>2W<br>2W | 1W<br>2W<br>3W | 1W<br>2W<br>3W |
| ECO mode stop and start power setting | Adjustable | | | | | |
| Protection (2) | a – g | | | | | |
| Operating temperature range | -40 to +65°C (fan-assisted cooling) | | | | | |
| Power derating | 1.25% per °C above 40°C | | | | | |
| Humidity (non-condensing) | max 95% | | | | | |
| **ENCLOSURE** | | | | | | |

| Inverter VE.Direct 230V | 12/250<br>24/250<br>48/250 | 12/375<br>24/375<br>48/375 | 12/500<br>24/500<br>48/500 | 12/800<br>24/800<br>48/800 | 12/1200<br>24/1200<br>48/1200 | 12/1600<br>24/1600<br>48/1600 |
|---|---|---|---|---|---|---|
| Material and colour | Steel chassis and plastic cover (blue Ral 5012) | | | | | |
| Battery connection terminals | Screw terminals | | | | | |
| Maximum battery cable cross-section | 10 mm²<br>10 mm²<br>10 mm² | 10 mm²<br>10 mm²<br>10 mm² | 10 mm²<br>10 mm²<br>10 mm² | 25 mm²<br>16 mm²<br>16 mm² | 35 mm²<br>25 mm²<br>25 mm² | 50mm²<br>25 mm²<br>25 mm² |
| Standard AC outlets | SCHUKO model: CEE 7/4<br>IEC model: IEC-320 (male plug included)<br>UK model: BS 1363<br>AU/NZ model: AS/NZS 3112 | | | | | |
| Protection category | IP 21 | | | | | |
| Weight | 2.7 kg | 3 kg | 3.5 kg | 5.5 kg | 7.2 kg | 8.9 kg |
| Dimensions (hxwxd, mm) | 86x165x260<br>86x165x260<br>86x165x260 | 86x165x260<br>86x165x260<br>86x165x260 | 86x172x275<br>86x172x275<br>86x172x275 | 95x231x334<br>105x216x310<br>105x216x310 | 117x231x374<br>117x231x333<br>117x231x333 | 117x231x395<br>117x231x365<br>117x231x365 |
| **ACCESSORIES** | | | | | | |
| Remote on/off terminal | Yes | | | | | |
| Automatic AC transfer switch | Not built-in. Add a Filax2 transfer switch, or use an inverter/charger instead. | | | | | |
| **STANDARDS** | | | | | | |
| Safety | EN/IEC 60335-1, EN/IEC 62109-1 | | | | | |
| EMC | EN 55014-1, EN 55014-2<br>IEC 61000-6-1, IEC 61000-6-2, IEC 61000-6-3 | | | | | |
| Automotive Directive | ECE R10-4 pending | | | | | |

1. Output socket:
   X=1: IEC
   X=2: Schuko
   X=3: AU/NZ
   X=4: UK
2. Protection key:
   a. Output short circuit
   b. Overload
   c. Battery voltage too high
   d. Battery voltage too low
   e. Temperature too high
   f. 230VAC on inverter output
   g. DC ripple too high

# 7. Appendix

## 7.1. AC outlet

Depending on the model, the inverter is equipped with one of the following AC outlet types:

| AC outlet | AC voltage | Image |
|---|---|---|
| IEC-320 (male plug included) | 230V | 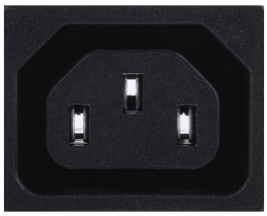 |
| Schuko (CEE 7/4) | 230V | |
| UK (BS 1363) | 230V | 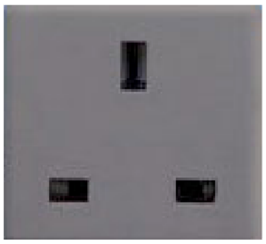 |
| AU/NZ (AS/NZS 3112) | 230V | |

## 7.2. Connection overview

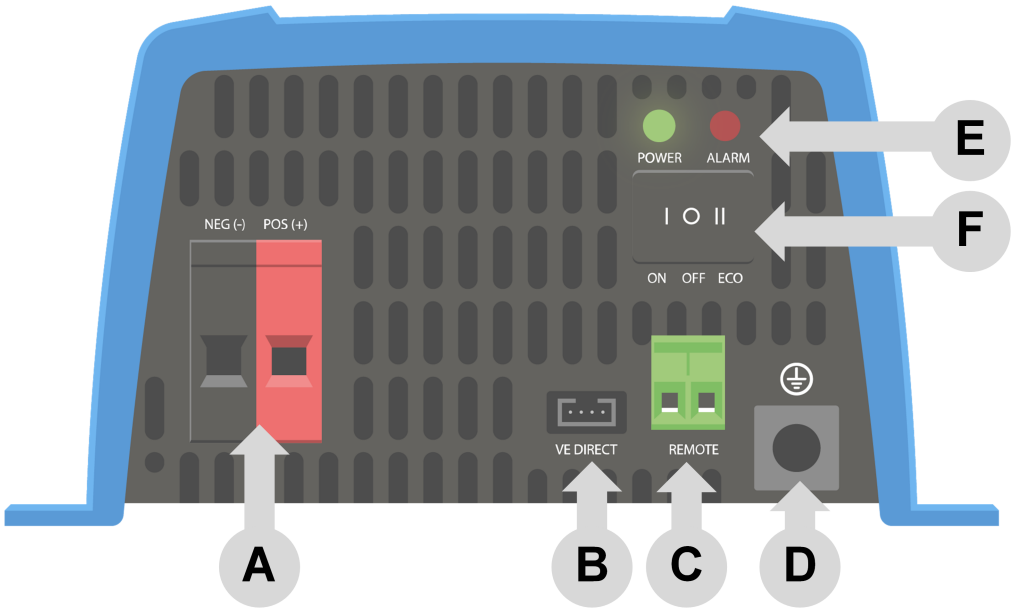


| # | Description |
|---|---|
| A | Battery connections |
| B | VE.Direct connection |
| C | Remote on/off terminal connection |
| D | Chassis ground connection |
| E | LEDs |
| F | ON/OFF/ECO switch |

## 7.3. Installation information neutral to ground connection

**Connecting the inverter neutral output to the chassis/ground**

The AC output is isolated from the DC input and the chassis. Local regulations may require a true neutral. In this case one of the AC output wires must be connected to the chassis, and the chassis must be connected to a reliable ground. Inside the inverter a provision has been made to be able to connect the neutral and the chassis; the way to do this is explained below.

Please be sure to disconnect the battery when connecting the neutral to protective earth (PE).

An internal PE wire, which is used to connect the neutral and the chassis, is accessible after removing the plastic cover. A Torx T10 screwdriver is needed to loosen the four screws which hold the plastic cover.

**For the 250 VA, 375 VA and 500 VA inverters:**

1. Neutral floating

   Position of the PE wire (indicated by the arrow):

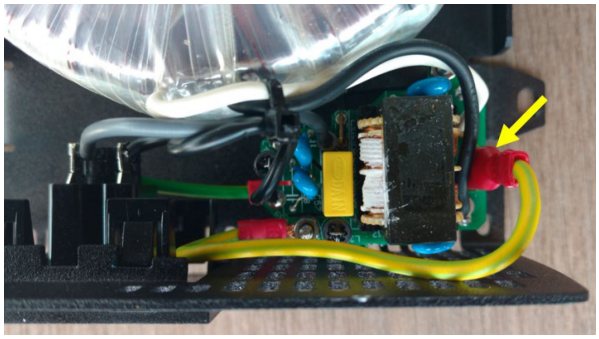

2. Neutral connected to protective earth

   Position of the PE wire (indicated by the arrow):

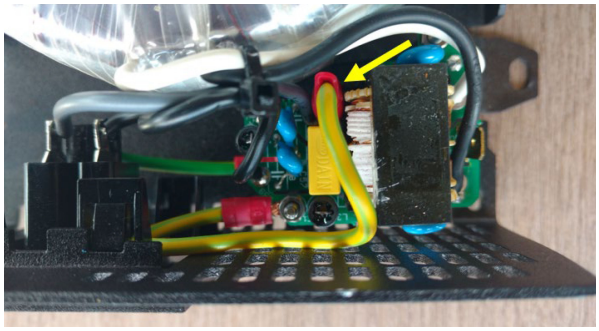

The earth wire from the chassis can be either connected to FJ1 (neutral floating) or to FJ2 (neutral connected to earth/chassis). The labels FJ1 and FJ2 are printed on the circuit board. The default position is FJ1, i.e. neutral is floating.

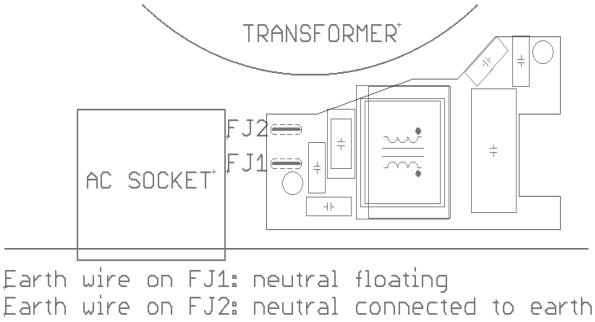

## 7.4. Dimensions 250 and 375 models

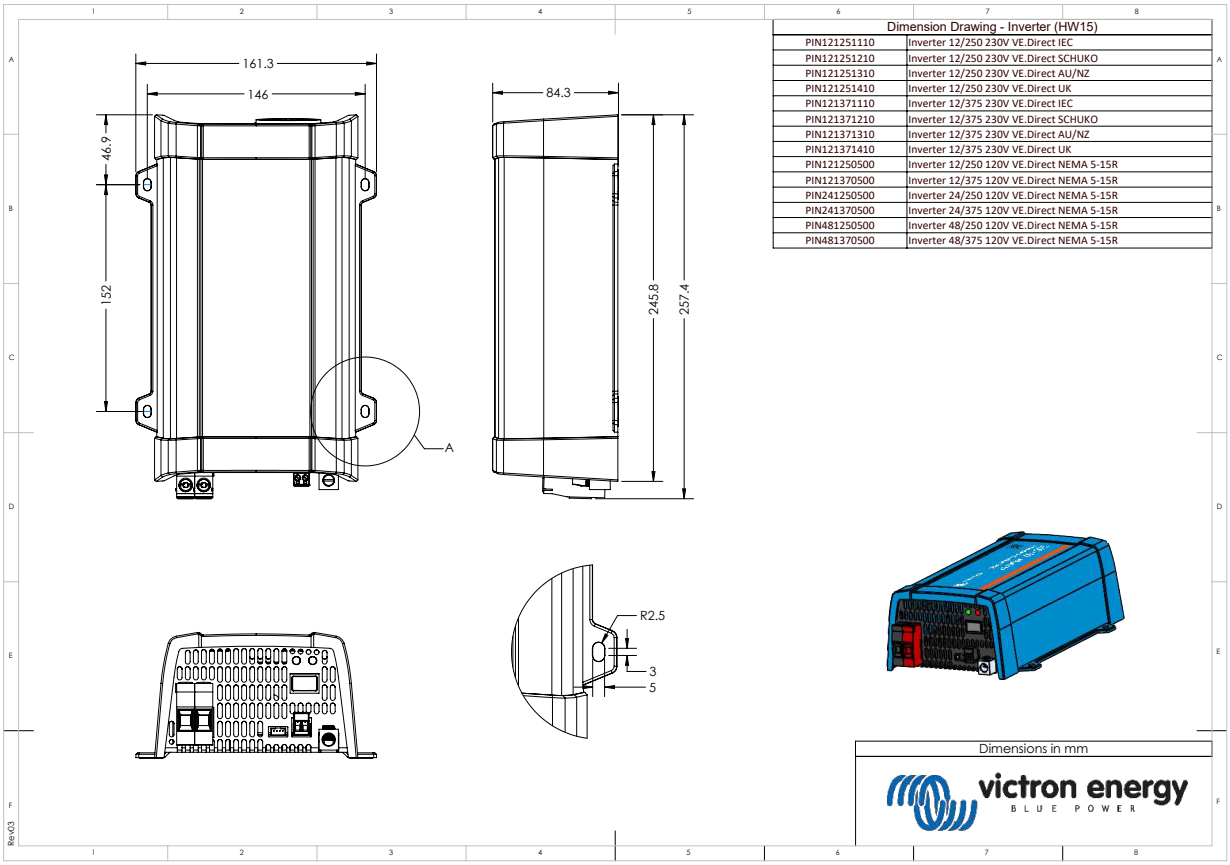

## 7.5. Dimensions 500 models

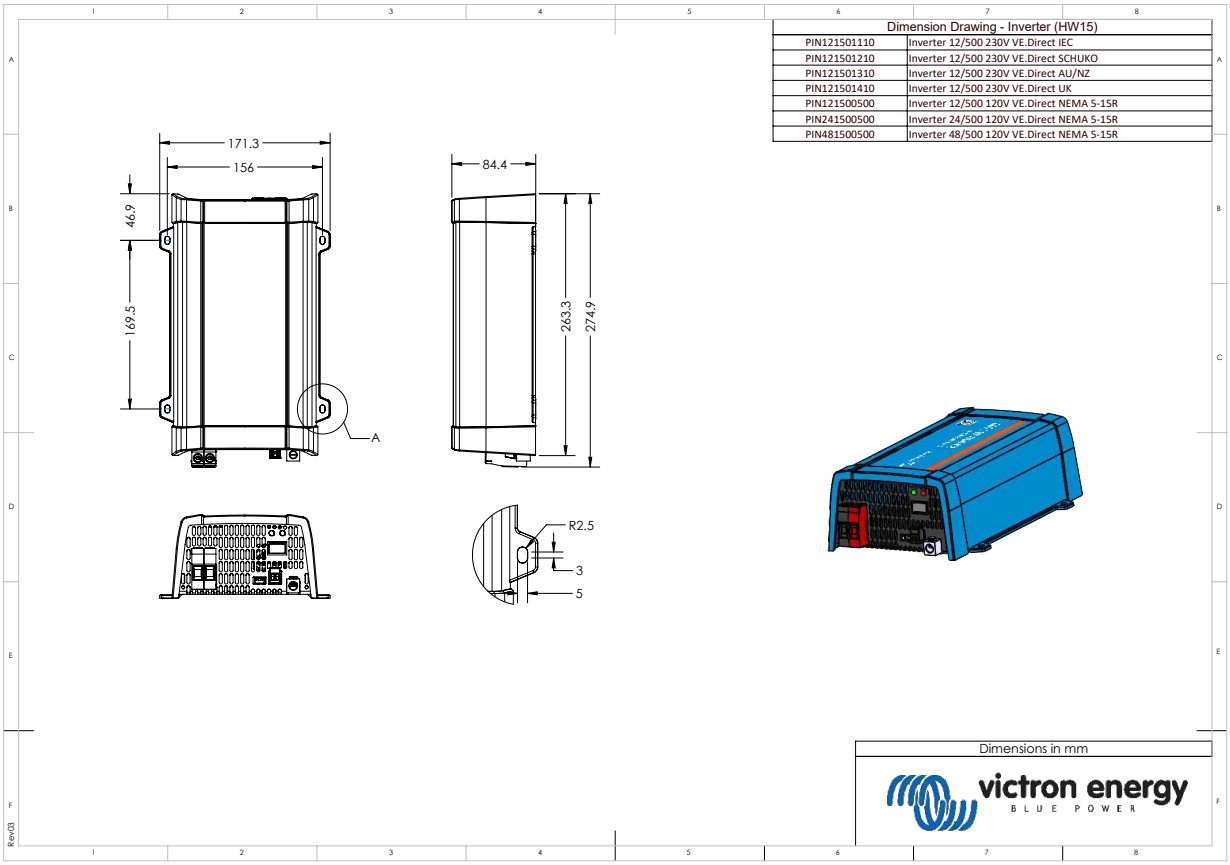

## 7.6. Dimensions 12/800 model

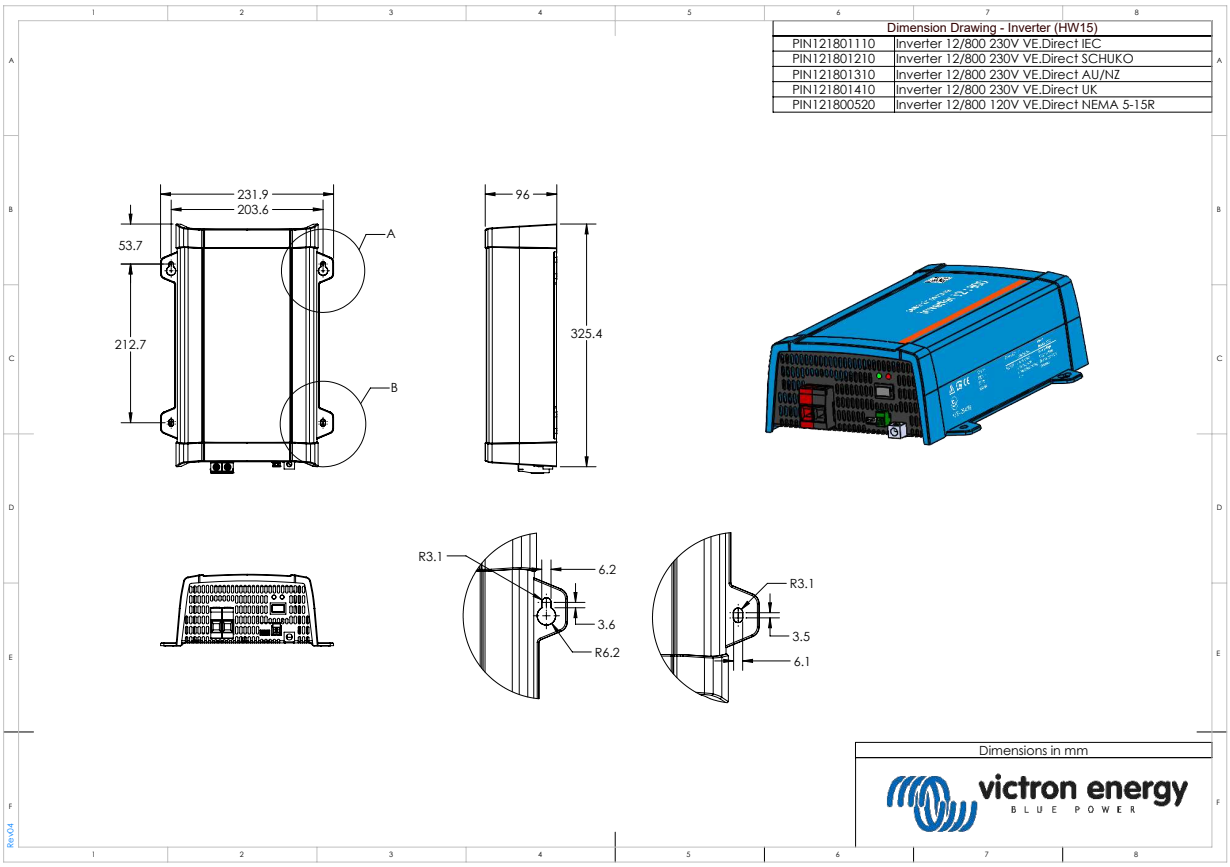

## 7.7. Dimensions 24/800 and 48/800 models

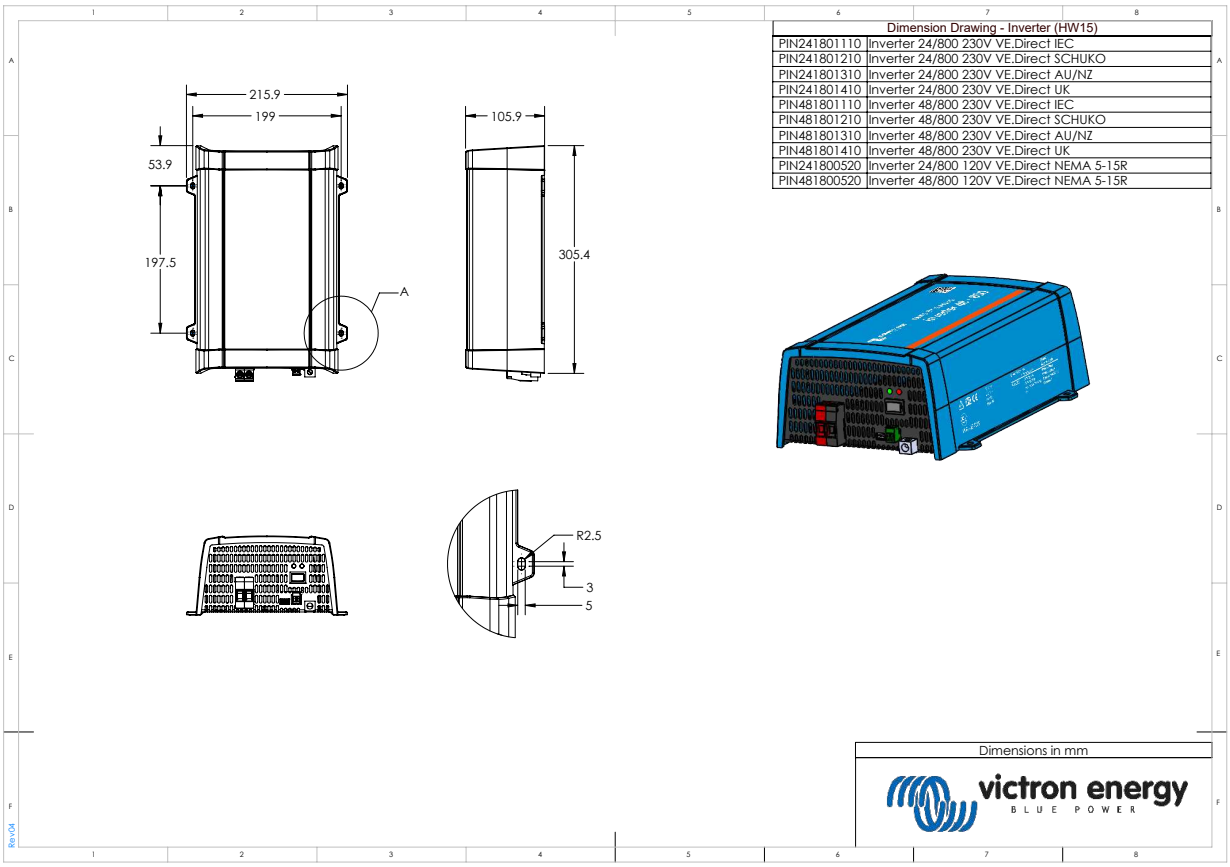

## 7.8. Dimensions 12/1200 model

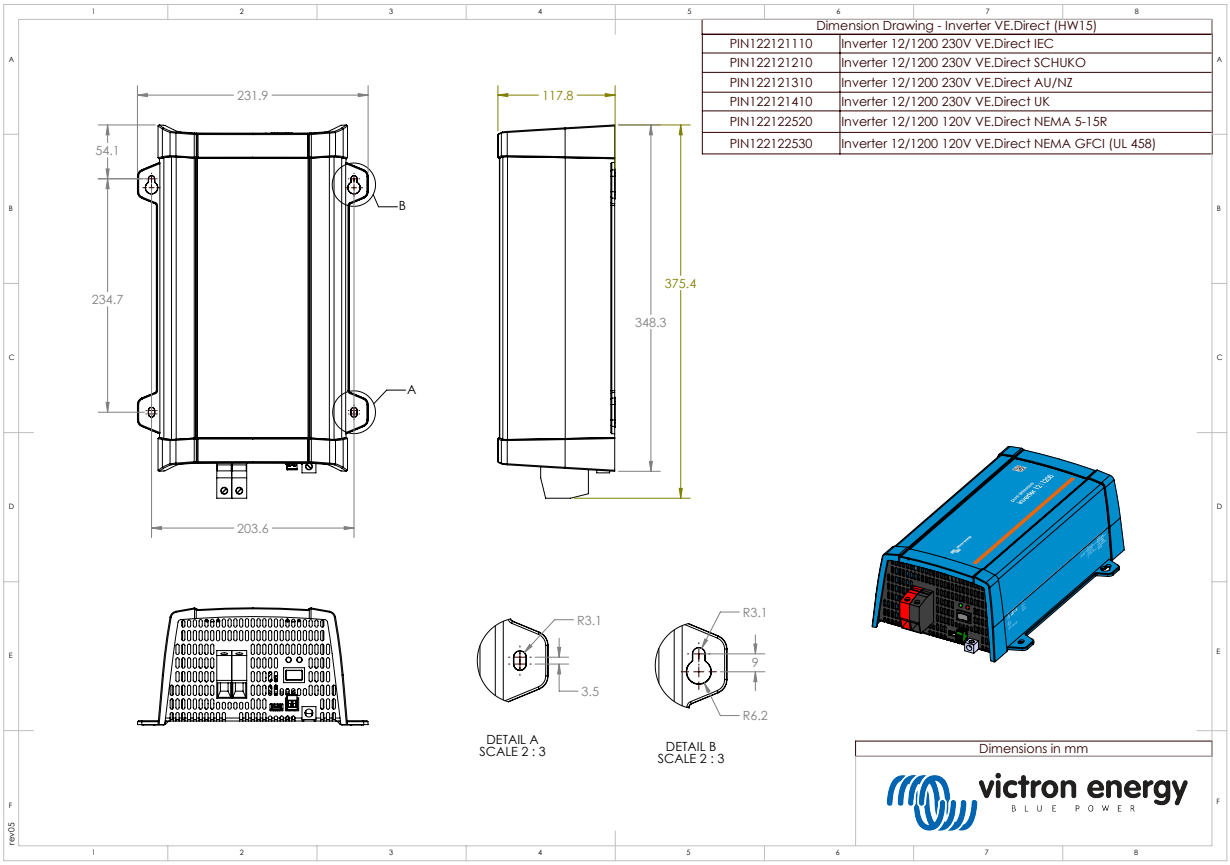

## 7.9. Dimensions 24/1200 and 48/1200 models

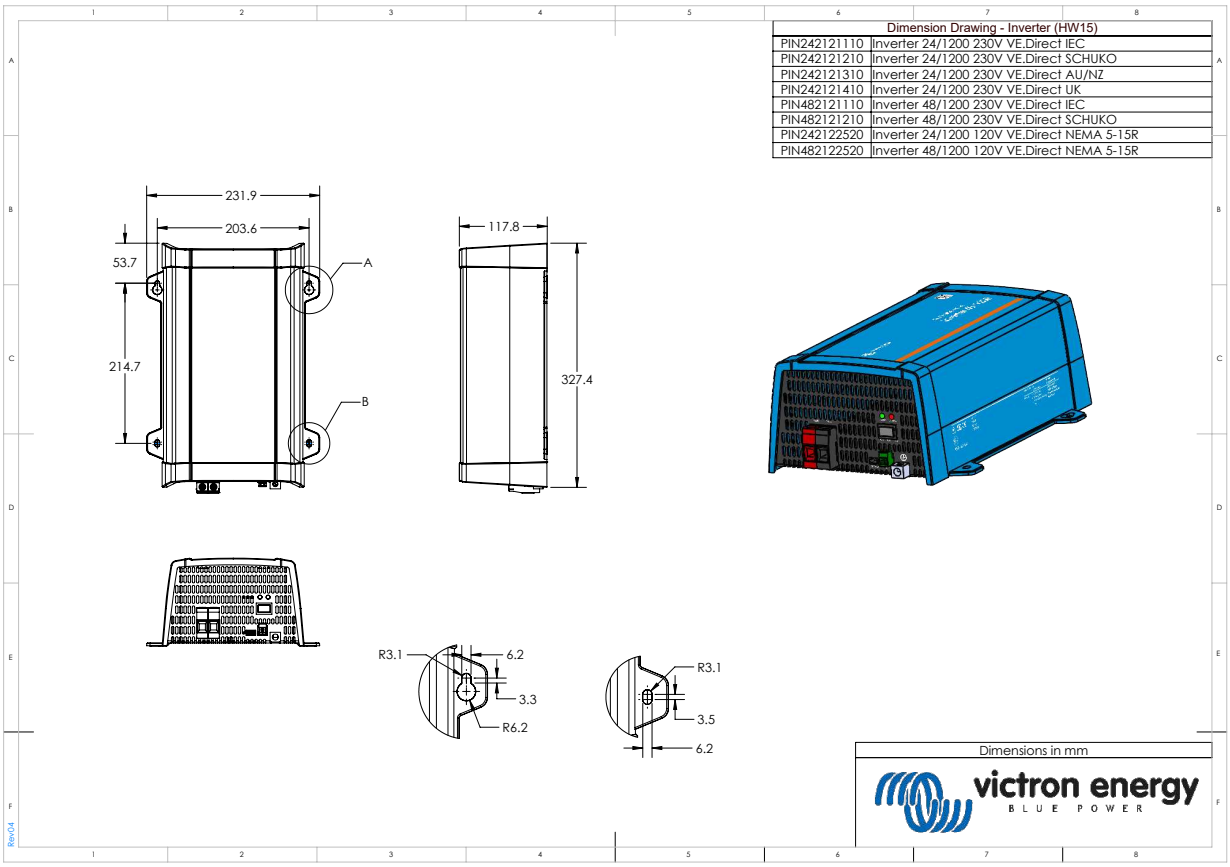
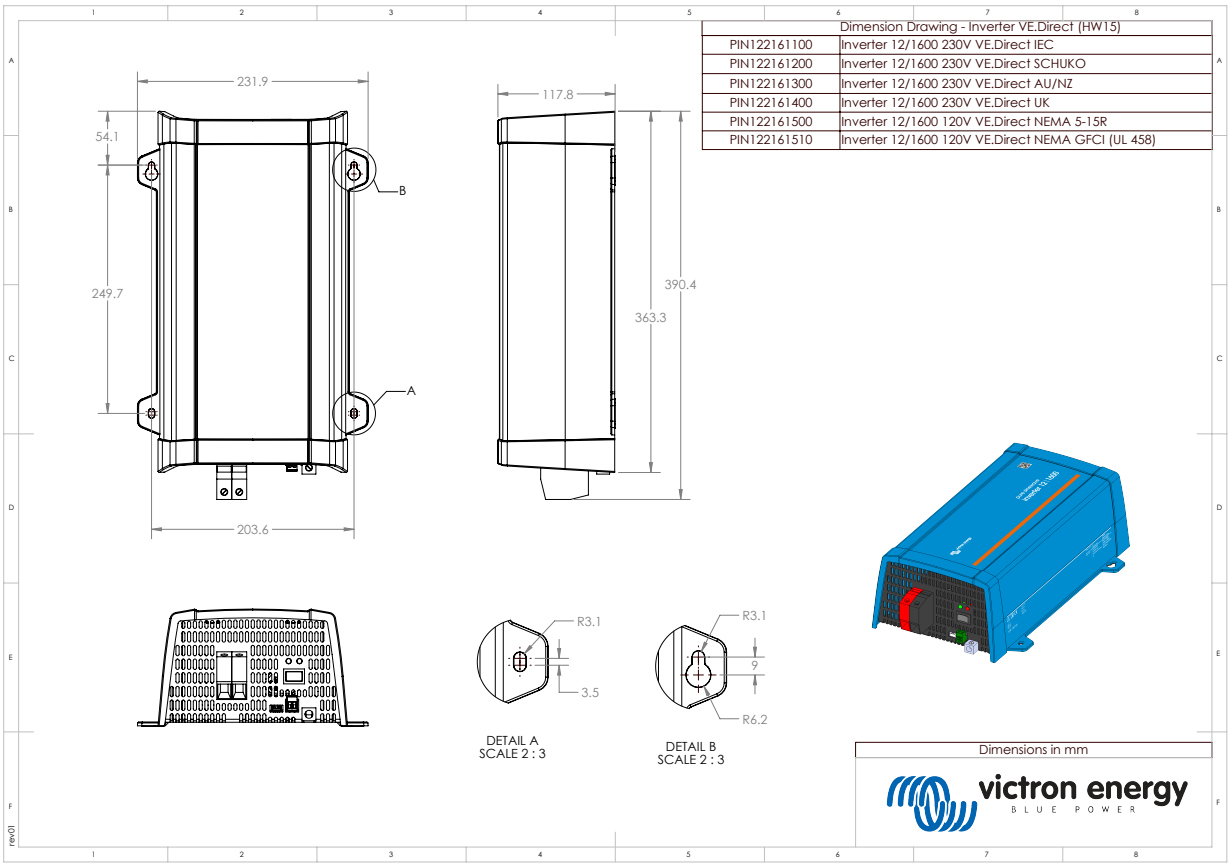
## 7.10. Dimensions 12/1600 model